SUMMARY OF SMALL SIGNS

SIGN NO.	SIGN NOMENCLATURE	SIGN	DIMENSIONS	FLAT ALUMINUM (TYPE A)	EXAL ALUMINUM (TYPE G)	SM RD SGN ASSM TY XXXXX (X) XX (X-XXXX) POST TYPE	POSTS	ANCHOR TYPE	MOUNTING DESIGNATION PREFABRICATED	MOUNTING DESIGNATION 1EXT or 2EXT = # of Ext	BRIDGE MOUNT CLEARANCE SIGNS (See Note 2) TY = TYPE
						FRP = Fiberglass TWT = Thin-Wall 10BWG = 10 BWG S80 = Sch 80	1 or 2	UA=Universal Conc UB=Universal Bolt SA=Slipbase-Conc SB=Slipbase-Bolt WS=Wedge Steel WP=Wedge Plastic	P = "Plain" T = "T" U = "U"	BM = Extruded Wind Beam WC = 1.12 #/ft Wing Channel EXAL= Extruded Alum Sign Panels	TY N TY S
1,3,4–9,14, 14–A,15–29, 32,34,40, 42–44,47, 50,60,62,65	S1–1		30"X30"			10BWG	1	SB	P		
2a,10a,37b, 46b,55b	D3–1	STREET NAME	VARIABLE			10BWG	1	SB	P		
2,10,13,31, 37,38,46, 53–A,54, 55,58	R1–1	STOP	30"X30"			10BWG	1	SB	P		
1a,3a,4a,7a, 14–Aa,16a, 21a,23a,27a, 29a,40a,44a, 65a	W16–9P	AHEAD	24"X12"			10BWG	1	SB	P		
37a,38a,46a, 53–Aa,54a, 55a	R1–3P	ALL WAY	18"X6"			10BWG	1	SB	P		
30,38b,41, 45,53,54b	R5–1	DO NOT ENTER	36"X36"			10BWG	1	SB	P		
5a,6a,8a,9a,14a,15a,18a, 17a,19a,20a,22a,24a,25a, 26a,28a,32a,34a,42a, 43a,47a,50a,60a,62a	W16–7P		24"X12"			10BWG	1	SB	P		
11,12,36,48,52	R1–5		36"X36"			10BWG	1	SB	P		
14b	R6–2(R)	ONE WAY	18"X24"			10BWG	1	SB	P		
15b,39	R6–2(L)	ONE WAY	18"X24"			10BWG	1	SB	P		
14c,15c,38c,39a,41a, 45a,53a,54c,59a,61a	S4–1p	7:30–8:30 AM 2:30–3:30 PM	24"X8"			10BWG	1	SB	P		
33	R2–1	SPEED LIMIT 40	24"X30"			10BWG	1	SB	P		
11–A,35,51,56,64	R7–1L	NO PARKING ANY TIME	12"X18"			10BWG	1	SB	P		

ALUMINUM SIGN BLANKS THICKNESS	
Square Feet	Minimum Thickness
Less than 7.5	0.080"
7.5 to 15	0.100"
Greater than 15	0.125"

The Standard Highway Sign Designs for Texas (SHSD) can be found at the following website.

http://www.txdot.gov/

NOTE:

1. Sign supports shall be located as shown on the plans, except that the Engineer may shift the sign supports, within design guidelines, where necessary to secure a more desirable location or to avoid conflict with utilities. Unless otherwise shown on the plans, the Contractor shall stake and the Engineer will verify all sign support locations.
2. For installation of bridge mount clearance signs, see Bridge Mounted Clearance Sign Assembly (BMCS)Standard Sheet.
3. For Sign Support Descriptive Codes, see Sign Mounting Details Small Roadside Signs General Notes & Details SMD(GEN).

Texas Department of Transportation — Traffic Operations Division Standard

SUMMARY OF SMALL SIGNS
(SHEET 1 OF 2)

SOSS

FILE: sums16.dgn	DN: _TxDOT_	CK: TxDOT	DW: _TxDOT_	CK: TxDOT
© TxDOT May 1987	CONT	SECT	JOB	HIGHWAY
REVISIONS	0902	90	082	N/A
4-16 8-16	DIST		COUNTY	SHEET NO.
	FTW		TARRANT	12

SUMMARY OF SMALL SIGNS

SM RD SGN ASSM TY XXXXX (X) XX (X-XXXX)

SIGN NO.	SIGN NOMENCLATURE	SIGN	DIMENSIONS	FLAT ALUMINUM (TYPE A)	EXAL ALUMINUM (TYPE G)	POST TYPE	POSTS	ANCHOR TYPE	MOUNTING DESIGNATION: PREFABRICATED	MOUNTING DESIGNATION: 1EXT or 2EXT = # of Ext BM = Extruded Wind Beam WC = 1.12 #/ft Wing Channel EXAL= Extruded Alum Sign Panels	BRIDGE MOUNT CLEARANCE SIGNS (See Note 2) TY = TYPE TY N TY S
						FRP = Fiberglass TWT = Thin-Wall 10BWG = 10 BWG S80 = Sch 80	1 or 2	UA=Universal Conc UB=Universal Bolt SA=Slipbase-Conc SB=Slipbase-Bolt WS=Wedge Steel WP=Wedge Plastic	P = "Plain" T = "T" U = "U"		
49	R7-1R		12"X18"			10BWG	1	SB	P		
39b,41b,45b, 53b,54d	S4-6P		24"X10"			10BWG	1	SB	P		
57,63	R10-6L		25"X36"			10BWG	1	SB	P		
59b,61b	S7-1T		12"X18"			10BWG	1	SB	P		
59,61	S5-1		24"X48"			10BWG	1	SB	P		
66-67	*R10-3E*	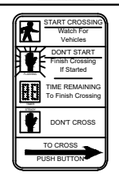	9"X15"								
68-69	*CUSTOM*	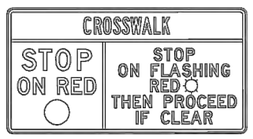	*30"X54"*								

ALUMINUM SIGN BLANKS THICKNESS	
Square Feet	Minimum Thickness
Less than 7.5	0.080"
7.5 to 15	0.100"
Greater than 15	0.125"

The Standard Highway Sign Designs for Texas (SHSD) can be found at the following website.

http://www.txdot.gov/

NOTE:

1. Sign supports shall be located as shown on the plans, except that the Engineer may shift the sign supports, within design guidelines, where necessary to secure a more desirable location or to avoid conflict with utilities. Unless otherwise shown on the plans, the Contractor shall stake and the Engineer will verify all sign support locations.
2. For installation of bridge mount clearance signs, see Bridge Mounted Clearance Sign Assembly (BMCS)Standard Sheet.
3. For Sign Support Descriptive Codes, see Sign Mounting Details Small Roadside Signs General Notes & Details SMD(GEN).

Texas Department of Transportation — Traffic Operations Division Standard

SUMMARY OF SMALL SIGNS
(SHEET 2 OF 2)

SOSS

FILE: sums16.dgn	DN: _TxDOT_	CK: TxDOT	DW: _TxDOT_	CK: TxDOT
© TxDOT May 1987	CONT	SECT	JOB	HIGHWAY
REVISIONS	0902	90	082	N/A
4-16 8-16	DIST	COUNTY		SHEET NO.
	FTW	TARRANT		13

18

ESTIMATE AND QUANTITY

						CSJ 0902-90-082		A L T	ITEM CODE			DESCRIPTION	U N I T	TOTAL	
						ALL ITEMS									
EST.	FINAL	EST.	FINAL	EST.	FINAL	EST.	FINAL		ITEM NO	DESC. CODE	SP NO.			EST.	FINAL
						477			100	6002		PREPARING ROW	STA	477	
						72			104	6001		REMOVING CONC (PAV)	SY	72	
						3,331			104	6015		REMOVING CONC (SIDEWALKS)	SY	3,331	
						4,085			104	6017		REMOVING CONC (DRIVEWAYS)	SY	4,085	
						115			104	6024		REMOVING CONC (RETAINING WALLS)	SY	115	
						3,603			104	6029		REMOVING CONC (CURB OR CURB & GUTTER)	LF	3,603	
						1			104	6044		REMOVING CONC (FLUME)	SY	1	
						2,765.50			105	6005		REMOVING STAB BASE AND ASPH PAV (3")	SY	2,766	
						512			162	6002		BLOCK SODDING	SY	512	
						18			168	6001		VEGATATIVE WATERING	MG	18	
						318			247	6061		FL BS (CMP IN PLC)(TYA GR1-2) (6")	SY	318	
						74			340	6011		D-GR HMA(SQ) TY-B PG64-22	TON	74	
						37			340	6106		D-GR HMA (SQ) TY-D PG64-22	TON	37	
						15			416	6032		DRILL SHAFT (TRF SIG POLE) (36 IN)	LF	15	
						32			450	6048		RAIL (HANDRAIL)(TY B)	LF	32	
						135			464	6004		RC PIPE (CL III) (21 IN)	LF	135	
						3			465	6416		INLET (COMPL) (CO) (10 FT) (FTW)	EA	3	
						113			474	6021		CAST-IN-PLACE TRENCH DRAIN	LF	113	
						3			479	6004		ADJUSTING MANHOLES (SANITARY)	EA	3	
						4			479	6005		ADJUSTING WATER VALVES (WATER VALVE BOXES)	EA	4	
						186			479	6008		ADJUSTING MANHOLES (WATER METER)	EA	186	
						3			496	6002		REMOV STR (INLET)	EA	3	
						10			496	6030		REMOVE STR (BOLLARD)	EA	10	
						3			500	6001		MOBILIZATION	LS	3	
						6			502	6025		BARR, SIGNS, TRAFFIC HANDLING	EA	6	
						420			506	6040		BIODEG EROSN CONT LOGS (INSTL) (8")	LF	420	
						420			506	6043		BIODEG EROSN CONT LOGS (REMOVE)	LF	420	
						1,775			529	6002		CONC CURB (TY II)	LF	1,775	
						127			529	6007		CONC CURB & GUTTER (TY I)	LF	127	
						3,529			529	6008		CONC CURB & GUTTER (TY II)	LF	3,529	
						7,724			530	6004		DRIVEWAYS (CONC)	SY	7,724	
						17,329			531	6001		CONC SIDEWALKS (4")	SY	17,329	
						4			531	6005		CURB RAMPS (TY 2)	EA	4	
						297			531	6010		CURB RAMPS (TY 7)	EA	297	
						20			531	6013		CURB RAMPS (TY 10)	EA	20	
						8,811			531	6057		CONC SIDEWALK (SPECIAL) (RETAINING WALL)	SF	8,811	
						20			550	6001		CHAIN LINK FENCE (INSTALL) (6')	LF	20	
						15			550	6003		CHAIN LINK FENCE (REMOVE)	LF	15	
						3			550	6015		REMOVE AND INSTALL EXISTING GATE	EA	3	
						25			618	6023		CONDT (PVC) (SCH 40) (2")	LF	25	
						15			618	6029		CONDT (PVC) (SCH 40) (3")	LF	15	
						35			618	6030		CONDT (PVC) (SCH 40) (3") (BORE)	LF	35	
						75			620	6007		ELEC CONDR (NO.8) BARE	LF	75	
						130			620	6010		ELEC CONDR (NO.6) INSULATED	LF	130	
						2			624	6010		GROUND BOX TY D (162922)W/APRON	EA	2	
						23			636	6003		ALUMINUM SIGNS (TY O)	SF	23	
						63			644	6009		IN SM RD SN SUP&AM TY10BWG(1)SB(P)	EA	63	

STATE DIST. NO.	COUNTY	CSJ	SHEET NO.
6	TARRANT	0909-90-038	14

FILENAME: G:\PROJECT\TXDOT\0909\038\902\CKR\PRWN\SSP\LOT SHEETS\QNTY SUM\SD.WG
PLOTTED BY: LEE MONASTERIO
PLOTTED ON: Wed Jun 29, 2011
PLOTTED AT: 11:05:56 AM

ESTIMATE AND QUANTITY

						CSJ 0902-90-082		ALT	ITEM CODE			DESCRIPTION	UNIT	TOTAL	
						ALL ITEMS									
EST.	FINAL	EST.	FINAL	EST.	FINAL	EST.	FINAL		ITEM NO	DESC. CODE	SP NO.			EST.	FINAL
						57.00			644	6068		RELOCATE SM RD SN SUP&AM TY 10BWG	EA	57	
						208.00			666	6035		REFL PAV MRK TY I (W)8"(SLD)(090MIL)	LF	208	
						2,511.00			666	6047		REFL PAV MRK TY I (W)24"(SLD)(090MIL)	LF	2,511	
						49.00			666	6098		REF PAV MRK TY I(W)18"(YLD TRI)(090MIL)	EA	49	
						465.00			666	6170		REFL PAV MRK TY II (Y)4"(SLD)	LF	465	
						152.00			672	6009		REFL PAV MRKR TY II-A-A	EA	152	
						4,265.00			678	6001		PAV SURF PREP FOR MRK (4")	LF	4,265	
						208.00			678	6004		PAV SURF PREP FOR MRK (8")	LF	208	
						2,454.00			678	6008		PAV SURF PREP FOR MRK (24")	LF	2,454	
						49.00			678	6022		PAV SURF PREP FOR MRK (18") (YLD TRI)	EA	49	
						220.00			678	6033		PAV SURF PREP FOR MRK (RPM)	EA	220	
						1.00			680	6002		INSTALL HWY TRF SIG (ISOLATED)	EA	1	
						4.00			682	6003		VEH SIG SEC (12")LED(YEL)	EA	4	
						8.00			682	6005		VEH SIG SEC (12")LED(RED)	EA	8	
						2.00			682	6018		PED SIG SEC (LED)(COUNTDOWN)	EA	2	
						4.00			682	6035		BACK PLATE (12")(3 SEC)(VENTED)ALUM	EA	4	
						50.00			684	6029		TRF SIG CBL (TY A)(14 AWG)(3 CONDR)	LF	50	
						60.00			684	6030		TRF SIG CBL (TY A)(14 AWG)(4 CONDR)	LF	60	
						30.00			684	6031		TRF SIG CBL (TY A)(14 AWG)(5 CONDR)	LF	30	
						200.00			684	6033		TRF SIG CBL (TY A) (14AWG) (7 CONDR)	LF	200	
						1.00			686	6031		INS TRF SIG PL AM (S) 1 ARM (28') LUM	EA	1	
						1.00			687	6001		PED POLE ASSEMBLY	EA	1	
						2.00			688	6001		PED DETECT PUSH BUTTON (APS)	EA	2	
						2.00			688	6003		PED DETECTOR CONTROLLER UNIT	EA	2	
						39.00			752	6005		TREE REMOVAL (4" - 12" DIA)	EA	39	
						4.00			752	6006		TREE REMOVAL (12" - 18" DIA)	EA	4	
						1.00			752	6007		TREE REMOVAL (18" - 24" DIA)	EA	1	
						3.00			752	6009		TREE REMOVAL (30" - 36" DIA)	EA	3	
						1.00			752	6010		TREE REMOVAL (36" - 42" DIA)	EA	1	
						117.00			1004	6001		TREE PROTECTION	EA	117	
						40.00			6000	6010		INSTALL TRAY CABLE	LF	40	
						6.00			6227	6001		SOLAR POWERED LED WARNING SIGN	EA	6	
												CONTRACTOR FORCE ACCOUNT WORK (PART)			
												SAFETY CONTINGENCY	LS	1.000	
												EROSION CONTROL MAINTENANCE	LS	1.000	

STATE DIST. NO.	COUNTY	CSJ	SHEET NO.
6	TARRANT	0909-90-038	15

DETOURS, BARRICADES, WARNING SIGNS, SEQUENCE OF WORK, ETC.

THE CONTRACTOR'S ATTENTION IS DIRECTED TO THE REQUIREMENTS OF ITEM 7, "LEGAL RELATIONS AND RESPONSIBILITIES TO THE PUBLIC", OF THE STANDARD SPECIFICATIONS. IN ADDITION TO THESE REQUIREMENTS, THE FOLLOWING PROVISIONS SHALL ALSO GOVERN ON THIS CONTRACT:

GENERAL

1. TRAFFIC MUST BE HANDLED THROUGHOUT THE PROJECT DURING CONSTRUCTION. THE CONTRACTOR IS RESPONSIBLE FOR PROVIDING SAFE AND COMFORTABLE PASSAGE FOR VEHICULAR AND PEDESTRIAN TRAFFIC WITH MINIMAL INCONVENIENCE TO THE PUBLIC, AS SHOWN IN THE PLANS OR AS DIRECTED/APPROVED BY THE ENGINEER.

2. THE CONTRACTOR MAY PROPOSE/RECOMMEND MODIFICATIONS TO THE SEQUENCE OF WORK FOR CONSIDERATION BY THE ENGINEER. ANY MAJOR RECOMMENDED MODIFICATION BY THE CONTRACTOR SHALL INCLUDE ANY CHANGES TO THE VARIOUS BID ITEMS, IMPACT TO TRAFFIC, EFFECT OF OVERALL PROJECT IN TIME AND COST, ETC. IF THIS PROPOSAL IS IMPLEMENTED, THE CONTRACTOR WILL BE RESPONSIBLE FOR DEVELOPING DETAILED PLAN SHEETS TO BE SEALED BY A LICENSED PROFESSIONAL ENGINEER FOR INCLUSION WITH THE CHANGE ORDER. THE CONTRACTOR CANNOT PROCEED WITH ANY CONSTRUCTION OPERATIONS BASED ON A REVISED PHASE/SEQUENCE UNTIL WRITTEN APPROVAL IS OBTAINED FROM THE ENGINEER. IF AT ANY TIME DURING CONSTRUCTION THE CONTRACTOR'S PROPOSED PLAN OF OPERATION FOR HANDLING TRAFFIC DOES NOT PROVIDE FOR SAFE AND COMFORTABLE MOVEMENT, THE CONTRACTOR WILL IMMEDIATELY CHANGE THEIR OPERATION TO CORRECT THE UNSATISFACTORY CONDITION.

3. DO NOT STORE ANY CONSTRUCTION MATERIAL OR EQUIPMENT AT ANY LOCATION THAT WILL CONSTITUTE A HAZARD AND WILL ENDANGER TRAFFIC.

4. ACCESS TO ADJOINING PROPERTY MUST BE MAINTAINED AT ALL TIMES.

5. TEMPORARY DRAINAGE IS THE RESPONSIBILITY OF THE CONTRACTOR.

6. CONTRACTOR IS RESPONSIBLE FOR MAINTAINING ALL EXISTING DRAINAGE PATTERNS DURING CONSTRUCTION.

7. LANE CLOSURES SHALL BE BETWEEN THE HOURS OF 9:00AM TO 3:00PM AND 7:00PM TO 6:00AM WEEKDAYS. ALL DAY SATURDAY & SUNDAY.

8. FLAGGER CREW WORKING DAYS ARE LIMITED TO MONDAY THROUGH FRIDAY.

9. CREWS ARE PERMITTED TO WORK ON MULTIPLE PROJECT SITES AT A TIME.

SAFETY

1. THE CONTRACTOR WILL PROVIDE, CONSTRUCT AND MAINTAIN BARRICADES AND SIGNS IN ACCORDANCE WITH STATE STANDARDS BC (1–12)–14. ANY SIGNS REQUIRED THAT ARE NOT DETAILED IN THE STANDARD SHEETS SHALL BE IN CONFORMANCE WITH THE "TEXAS MANUAL ON UNIFORM TRAFFIC CONTROL DEVICES FOR STREETS AND HIGHWAYS" AND "THE STANDARD HIGHWAY SIGN DESIGNS FOR TEXAS".

2. BARRICADES AND WARNING SIGNS SHALL BE PLACED AS INDICATED ON THE PLANS. THIS SHALL BE CONSIDERED THE MINIMUM REQUIRED TO PROVIDE FOR THE SAFETY OF TRAFFIC DURING CONSTRUCTION. THE CONTRACTOR SHALL PROVIDE AND MAINTAIN OTHER SUCH BARRICADES AND SIGNS DEEMED NECESSARY BY THE ENGINEER OR AS DIRECTED BY FIELD CONDITIONS, TO PROVIDE FOR THE PASSAGE OF TRAFFIC IN SAFETY AT ALL TIMES.

3. THE CONTRACTOR SHALL PROVIDE AND MAINTAIN FLAGGERS AS DIRECTED/APPROVED BY THE ENGINEER, AT SUCH POINTS, AND FOR SUCH PERIODS OF TIME AS MAY BE REQUIRED, TO PROVIDE FOR THE SAFETY OF THE TRAVELING PUBLIC AND THE CONTRACTOR'S PERSONNEL.

4. THE CONTRACTOR SHALL KEEP THE ROADWAY CLEAN AND FREE OF DIRT OR OTHER MATERIALS DURING HAULING OPERATIONS. IF THE CONTRACTOR DOES NOT MAINTAIN A CLEAN ROADWAY, THEY SHALL CEASE ALL CONSTRUCTION OPERATIONS, WHEN DIRECTED BY THE ENGINEER, TO CLEAN THE ROADWAY TO THE SATISFACTION OF THE ENGINEER.

HAULING EQUIPMENT

1. THE USE OF RUBBER–TIRED EQUIPMENT WILL BE REQUIRED FOR MOVING DIRT OR OTHER MATERIALS ALONG OR ACROSS PAVEMENTED SURFACES. WHERE THE CONTRACTOR DESIRES TO MOVE ANY EQUIPMENT NOT LICENSED FOR OPERATION ON PUBLIC HIGHWAYS, ON OR ACROSS PAVEMENT. THEY SHALL PROTECT THE PAVEMENT FROM DAMAGE AS DIRECTED/APPROVED BY THE ENGINEER.

FINAL CLEAN UP

1. UPON COMPLETION OF THE WORK AND BEFORE FINAL ACCEPTANCE AND FINAL PAYMENT IS MADE, THE CONTRACTOR SHALL CLEAR AND REMOVE FROM THE SITE ALL SURPLUS AND DISCARDED MATERIALS AND DEBRIS OF EVERY KIND AND LEAVE THE ENTIRE PROJECT IN A SMOOTH, NEAT AND SIGHTLY CONDITION.

PAYMENT

1. ALL BARRICADES, SIGNS, AND FLAGGERS SHALL BE SUBSIDIARY TO ITEM 502 BARRICADES, SIGNS AND TRAFFIC HANDLING. ALL EROSION AND SEDIMENT CONTROL DEVICES WILL BE PAID FOR UNDER ITEM 506 TEMPORARY EROSION, SEDIMENTATION, AND ENVIRONMENTAL CONTROLS. ALL OTHER WORK AND MATERIALS SHALL BE SUBSIDIARY TO THE VARIOUS BID ITEMS UNLESS OTHERWISE INDICATED IN THE PLANS.

STATE OF TEXAS
JOSHUA WRIGHT
125733
LICENSED
PROFESSIONAL ENGINEER

PROJECT ENGINEER
6/7/2021
DATE

DATE	BY	REV	REVISION

DUNAWAY
(TX REG F-1114)
550 Bailey Avenue
Suite 400
Fort Worth, TX 76107
817-335-1121

FORT WORTH

PROJ NO. 101264

Texas Department of Transportation
© 2021

2018 SAFE ROUTES TO SCHOOL IMPROVEMENTS

TRAFFIC CONTROL NARRATIVE

FED.RD. DIV. NO.	STATE	PROJECT NO.			HIGHWAY NO.
6	TEXAS	STP 2021(929)TP			VA
STATE DISTRICT	COUNTY	CONTROL NO.	SECTION NO.	JOB NO.	SHEET NO.
FTW	TARRANT	0902	90	082	16

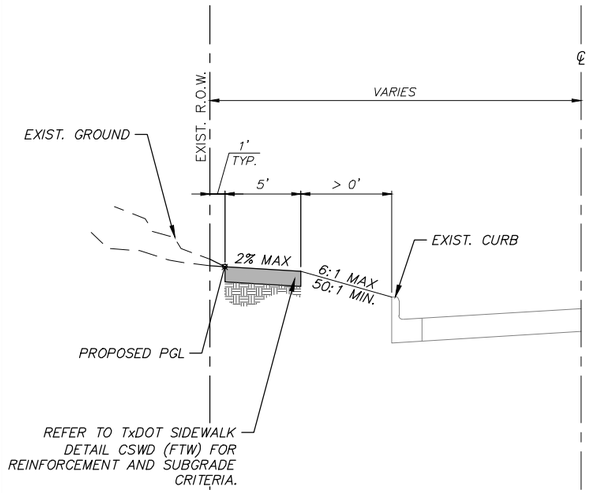

PROPOSED SIDEWALK SETBACK FROM CURB

NOT TO SCALE

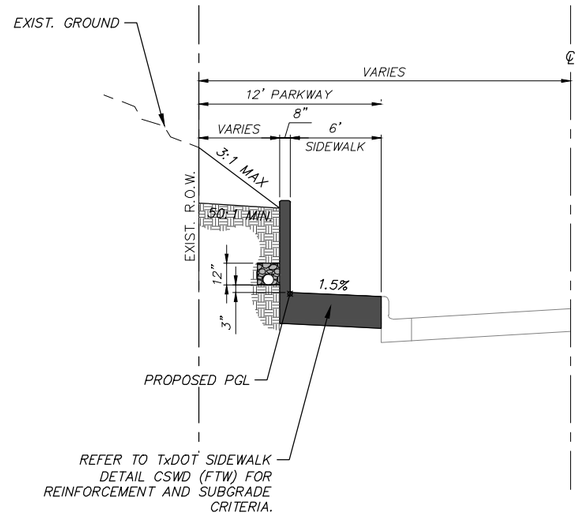

PROPOSED SIDEWALK ADJACENT TO CURB W/ RETAINING WALL *

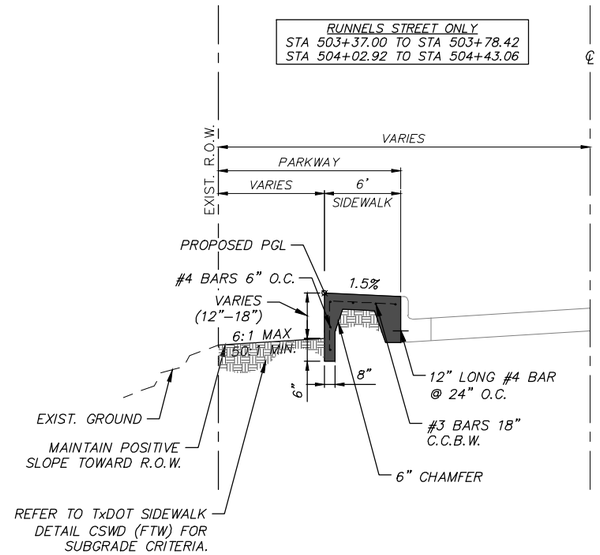

PROPOSED SIDEWALK SETBACK FROM CURB W/ RETAINING WALL *

TYPICAL SECTIONS NOTES:

1. CROSS SLOPE OF SIDEWALKS VARY BETWEEN (+) 2% & (–) 2% BASED ON EXISTING GROUND TOPOGRAPHY. TYPICAL SLOPE DIRECTION IS TOWARDS ROADWAY UNLESS CONTRACTOR VERIFIES POSITIVE DRAINAGE OCCURS IN OPPOSITE DIRECTION. CONTRACTOR TO VERIFY GRADES PRIOR TO CONSTRUCTION.
2. CONTRACTOR TO GRADE BETWEEN TOP BACK OF CURB/EDGE OF ASPHALT AND INSIDE EDGE OF SIDEWALK TO ALLOW FOR POSITIVE DRAINAGE TOWARD STREET.
3. REFER TO SIDEWALK DETAILS 32 13 20–D546 FOR REINFORCEMENT, AND SUBGRADE.

* WHERE SIDEWALK WITH RETAINING IS SPECIFIED, RETAINING WALL WILL BE SUBSIDIARY TO THE ITEM, "CONCRETE SIDEWALK (SPECIAL) (RETAINING WALL)", SF. SEE DETAIL SHEET 257.

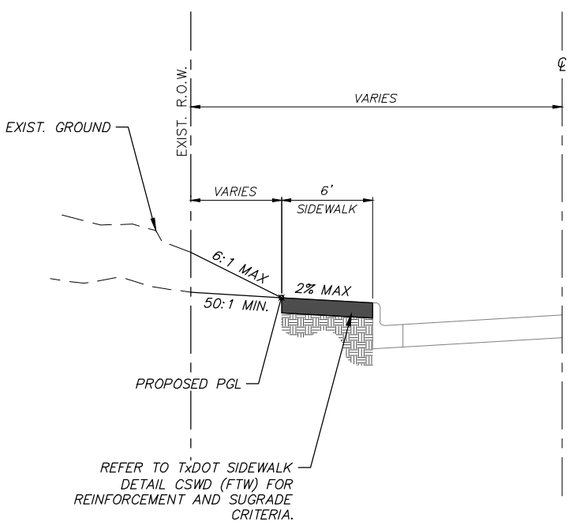

PROPOSED SIDEWALK ADJACENT TO CURB

NOT TO SCALE

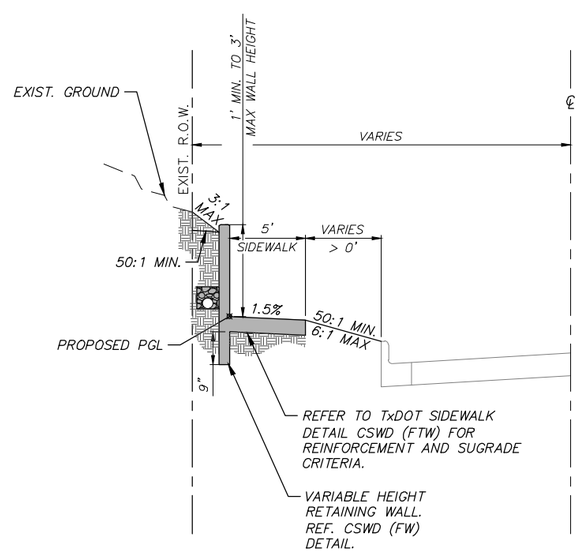

PROPOSED SIDEWALK SETBACK FROM CURB W/ RETAINING WALL *

NOT TO SCALE

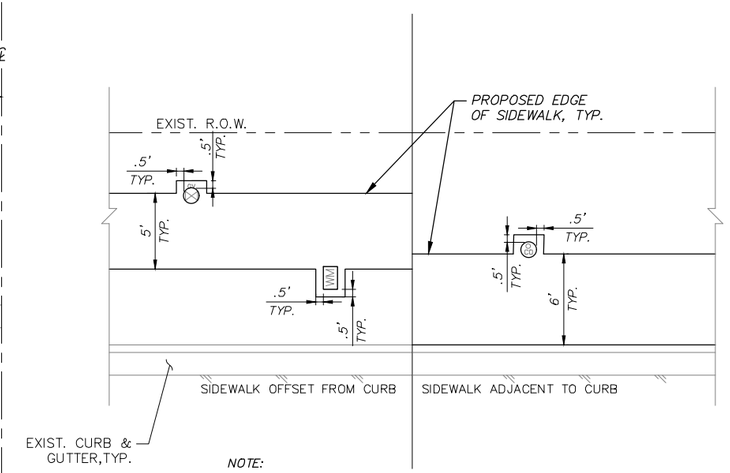

NOTE:

ALL VALVE BOXES AND CLEAN–OUTS NOT AT LEAST 6" INSIDE OR OUTSIDE OF SIDEWALK PAVEMENT SHALL BE ADJUSTED TO FINAL GRADE AND A CONCRETE APRON MONOLITHICALLY POURED WITH SIDEWALK.

SIDEWALK OBSTRUCTION APRON DETAIL

NOT TO SCALE

STATE OF TEXAS
JOSHUA WRIGHT
125733
LICENSED
PROFESSIONAL ENGINEER

PROJECT ENGINEER
6/7/2021
DATE

DATE	BY	REV	REVISION

DUNAWAY [TX REG F-1114]
550 Bailey Avenue
Suite 400
Fort Worth, TX 76107
817-335-1121

FORT WORTH

PROJ NO. 101264

Texas Department of Transportation
© 2021

2018 SAFE ROUTES TO SCHOOL IMPROVEMENTS

TYPICAL SECTIONS SIDEWALKS

FED.RD. DIV. NO.	STATE	PROJECT NO.			HIGHWAY NO.
6	TEXAS	STP 2021(929)TP			VA
STATE DISTRICT	COUNTY	CONTROL NO.	SECTION NO.	JOB NO.	SHEET NO.
FTW	TARRANT	0902	90	082	17

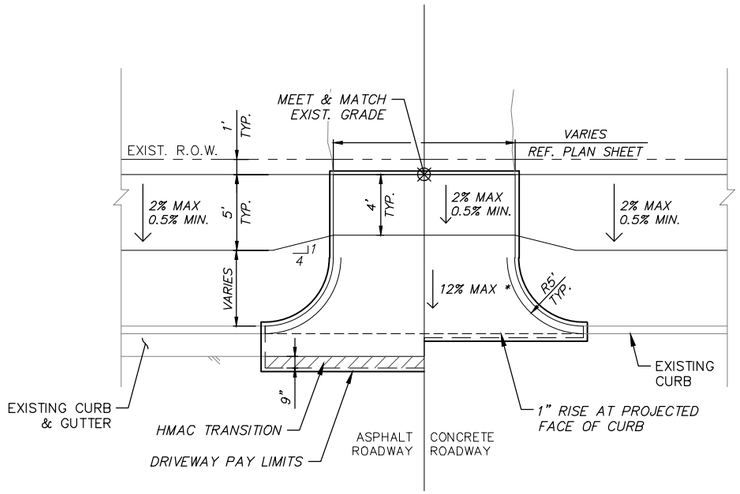

* CONTRACTOR MAY MATCH EXISTING GRADE WHERE DRIVEWAYS EXCEED MAX GRADE.

DRIVEWAY DETAIL A
SIDEWALK SETBACK FROM BACK OF CURB
SETBACK SIDEWALK

SCALE: 1"=10'

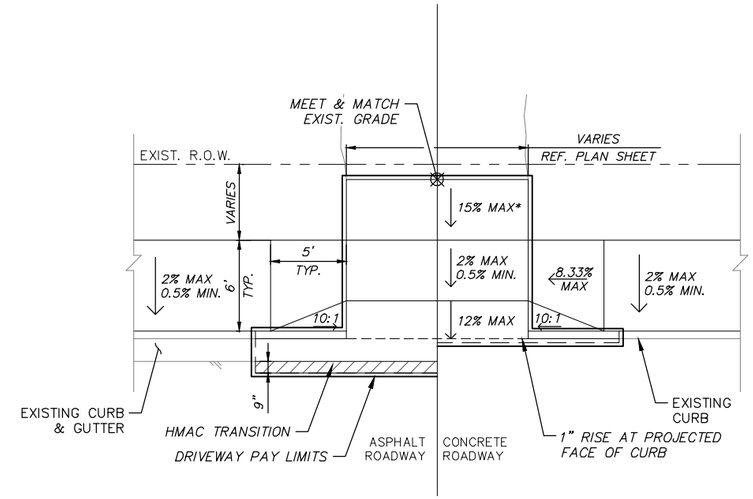

* CONTRACTOR MAY MATCH EXISTING GRADE WHERE DRIVEWAYS EXCEED MAX GRADE.

DRIVEWAY DETAIL B
SIDEWALK ADJACENT TO BACK OF CURB
RAMP SIDEWALK

SCALE: 1"=10'

DRIVEWAY NOTES:

1. CONTRACTOR SHALL FIELD VERIFY ALL DRIVEWAY SLOPES PRIOR TO CONSTRUCTION.
2. POSITIVE DRAINAGE TO OCCUR ON ALL DRIVEWAYS.
3. CONTRACTOR MAY MEET & MATCH DRIVEWAY GRADE PRIOR TO R.O.W. IF PROPOSED SLOPES DO NOT EXCEED EXISTING SLOPES.
4. REFER TO TXDOT DETAILS CSWD-08 & PED-18 FOR ADDITIONAL INFORMATION.

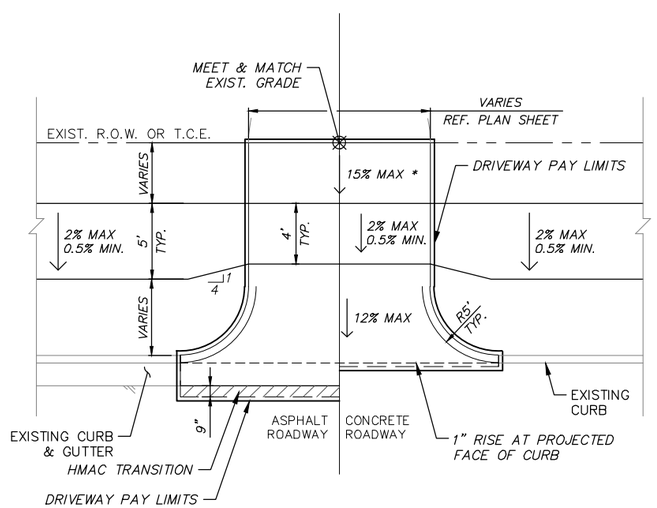

* CONTRACTOR MAY MATCH EXISTING GRADE WHERE DRIVEWAYS EXCEED MAX GRADE.

DRIVEWAY DETAIL A - ALTERNATE
SIDEWALK SETBACK FROM BACK OF CURB
SETBACK SIDEWALK

SCALE: 1"=10'

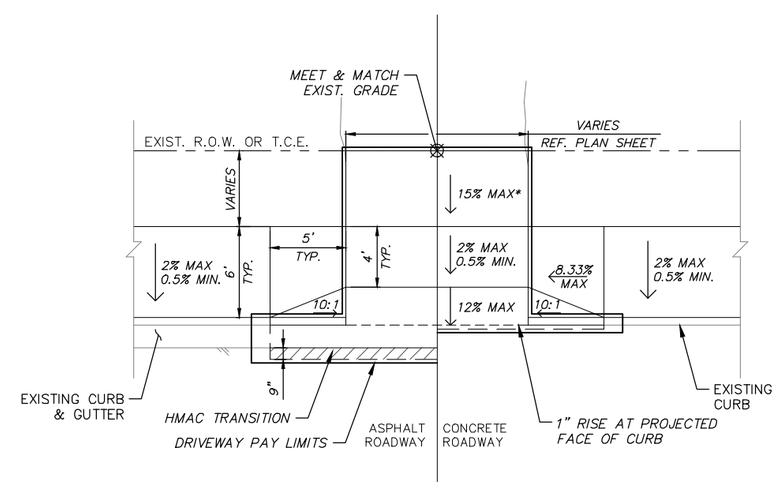

* CONTRACTOR MAY MATCH EXISTING GRADE WHERE DRIVEWAYS EXCEED MAX GRADE.

DRIVEWAY DETAIL B - ALTERNATE
SIDEWALK ADJACENT TO BACK OF CURB
RAMP SIDEWALK

SCALE: 1"=10'

STATE OF TEXAS
JOSHUA WRIGHT
125733
LICENSED
PROFESSIONAL ENGINEER

PROJECT ENGINEER
6/7/2021
DATE

DATE	BY	REV	REVISION

DUNAWAY
[TX REG F-1114]
550 Bailey Avenue
Suite 400
Fort Worth, TX 76107
817-335-1121

FORT WORTH
PROJ NO. 101264

Texas Department of Transportation
© 2021

2018 SAFE ROUTES TO SCHOOL IMPROVEMENTS

TYPICAL SECTIONS
DRIVEWAYS

FED.RD. DIV. NO.	STATE	PROJECT NO.			HIGHWAY NO.
6	TEXAS	STP 2021(929)TP			VA
STATE DISTRICT	COUNTY	CONTROL NO.	SECTION NO.	JOB NO.	SHEET NO.
FTW	TARRANT	0902	90	082	18

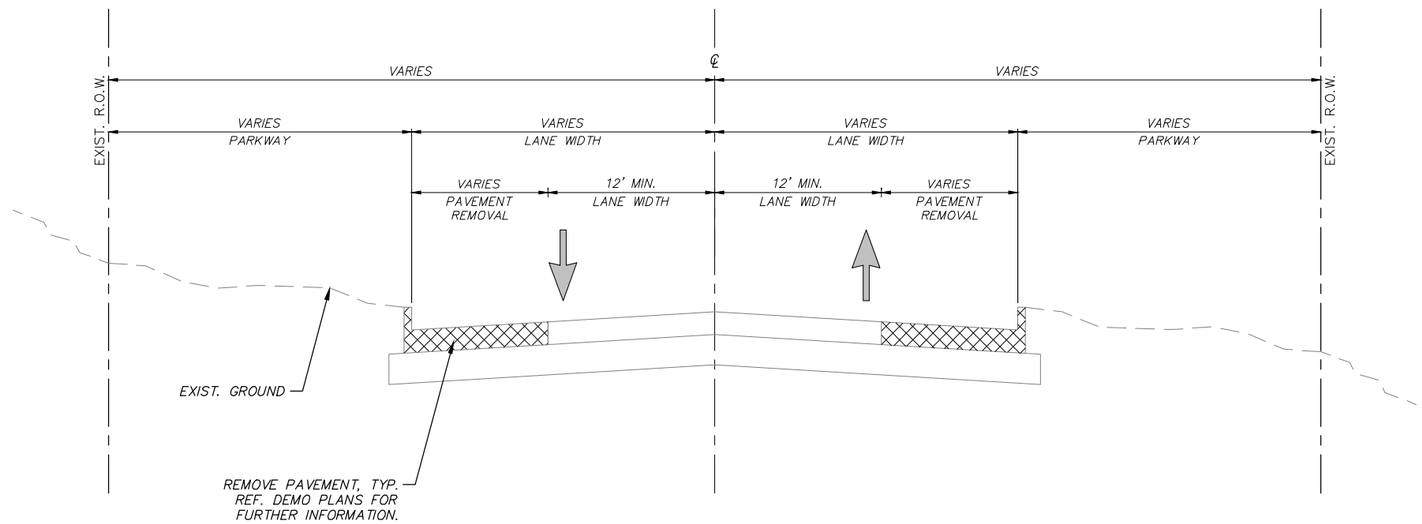

EXISTING CONDITIONS BULB-OUTS

NOT TO SCALE

BULB–OUT NOTES:

1. CONTRACTOR TO FIELD VERIFY PARKWAY GRADES PRIOR TO CONSTRUCTION.
2. TRENCH DRAINS MAY OCCUR ON EITHER SIDE OF STREET. REFERENCE BULB–OUT PLAN SHEETS FOR MORE INFORMATION.
3. CONTRACTOR TO FIELD VERIFY LOCATIONS OF ALL UNDERGROUND UTILITIES PRIOR TO ANY CONSTRUCTION ACTIVITY AND DETERMINE IF THERE ARE ANY CONFLICTS WITH THE PROPOSED FACILITIES. CONTRACTOR SHALL NOTIFY THE ENGINEER IMMEDIATELY WHEN CONFLICTS ARE DISCOVERED.

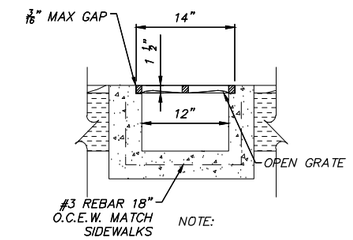

NOTE:

NEENAH R–4999–DX, TYPE P OR APPROVED EQUAL.

TRENCH DRAIN DETAIL

NOT TO SCALE

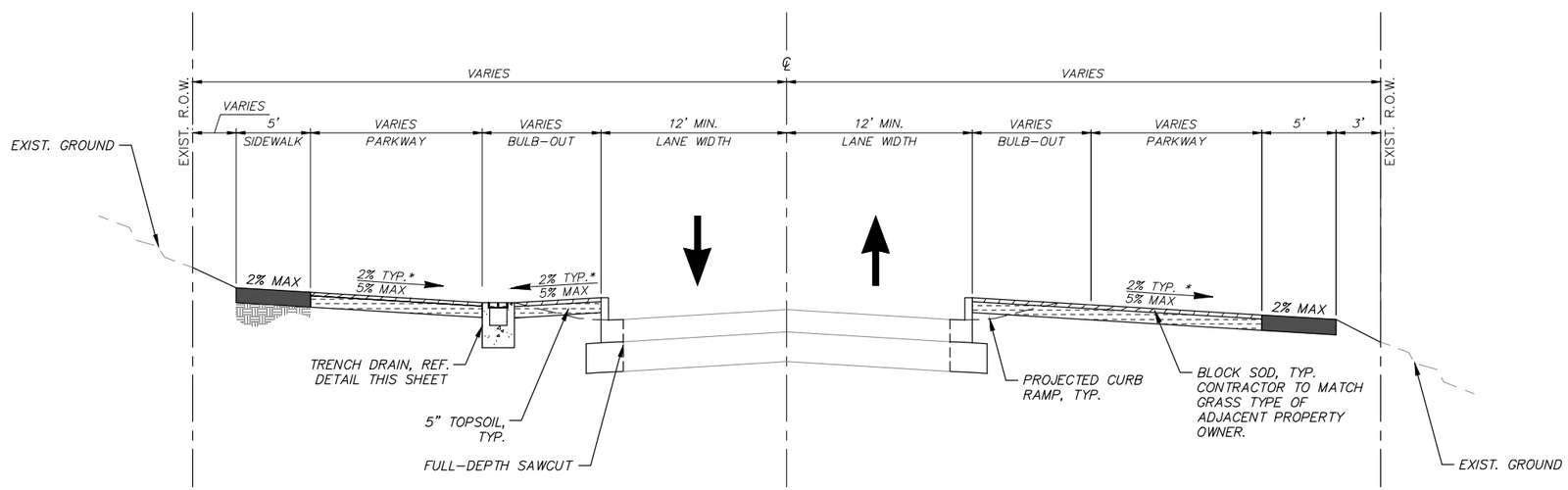

PROPOSED CONDITIONS BULB-OUTS

NOT TO SCALE

* WHERE PARKWAY SLOPES AWAY FROM ℄, CONTRACTOR TO GRADE BULB–OUT IN SAME DIRECTION.

STATE OF TEXAS
JOSHUA WRIGHT
125733
LICENSED
PROFESSIONAL ENGINEER

PROJECT ENGINEER
6/7/2021
DATE

DATE	BY	REV	REVISION

DUNAWAY
[TX REG F-1114]
550 Bailey Avenue
Suite 400
Fort Worth, TX 76107
817-335-1121

FORT WORTH

PROJ NO. 101264

Texas Department of Transportation

2018 SAFE ROUTES TO SCHOOL IMPROVEMENTS

TYPICAL SECTIONS BULB-OUTS

FED.RD. DIV. NO.	STATE	PROJECT NO.			HIGHWAY NO.
6	TEXAS	STP 2021(929)TP			VA
STATE DISTRICT	COUNTY	CONTROL NO.	SECTION NO.	JOB NO.	SHEET NO.
FTW	TARRANT	0902	90	082	19

BARRICADE AND CONSTRUCTION (BC) STANDARD SHEETS GENERAL NOTES:

1. The Barricade and Construction Standard Sheets (BC sheets) are intended to show typical examples for placement of temporary traffic control devices, construction pavement markings, and typical work zone signs. The information contained in these sheets meet or exceed the requirements shown in the "Texas Manual on Uniform Traffic Control Devices" (TMUTCD).

2. The development and design of the Traffic Control Plan (TCP) is the responsibility of the Engineer.

3. The Contractor may propose changes to the TCP that are signed and sealed by a licensed professional engineer for approval. The Engineer may develop, sign and seal Contractor proposed changes.

4. The Contractor is responsible for installing and maintaining the traffic control devices as shown in the plans. The Contractor may not move or change the approximate location of any device without the approval of the Engineer.

5. Geometric design of lane shifts and detours should, when possible, meet the applicable design criteria contained in manuals such as the American Association of State Highway and Transportation Officials (AASHTO), "A Policy on Geometric Design of Highways and Streets," the TxDOT "Roadway Design Manual" or engineering judgment.

6. When projects abut, the Engineer(s) may omit the END ROAD WORK, TRAFFIC FINES DOUBLE, and other advance warning signs if the signing would be redundant and the work areas appear continuous to the motorists. If the adjacent project is completed first, the Contractor shall erect the necessary warning signs as shown on these sheets, the TCP sheets or as directed by the Engineer. The BEGIN ROAD WORK NEXT X MILES sign shall be revised to show appropriate work zone distance.

7. The Engineer may require duplicate warning signs on the median side of divided highways where median width will permit and traffic volumes justify the signing.

8. All signs shall be constructed in accordance with the details found in the "Standard Highway Sign Designs for Texas," latest edition. Sign details not shown in this manual shall be shown in the plans or the Engineer shall provide a detail to the Contractor before the sign is manufactured.

9. The temporary traffic control devices shown in the illustrations of the BC sheets are examples. As necessary, the Engineer will determine the most appropriate traffic control devices to be used.

10. As shown on BC(2), the OBEY WARNING SIGNS STATE LAW sign, STAY ALERT TALK OR TEXT LATER (see Sign Detail G20-10T) and the WORK ZONE TRAFFIC FINES DOUBLE sign with plaque shall be erected in advance of the CSJ limits. However, the TRAFFIC FINES DOUBLE sign will not be required on projects consisting solely of mobile operation work, such as striping or milling edgeline rumble strips. The BEGIN ROAD WORK NEXT X MILES, CONTRACTOR and END ROAD WORK signs shall be erected at or near the CSJ limits.

11. Except for devices required by Note 10, traffic control devices should be in place only while work is actually in progress or a definite need exists.

12. The Engineer has the final decision on the location of all traffic control devices.

13. Inactive equipment and work vehicles, including workers' private vehicles must be parked away from travel lanes. They should be as close to the right-of-way line as possible, or located behind a barrier or guardrail, or as approved by the Engineer.

WORKER SAFETY APPAREL NOTES:

1. Workers on foot who are exposed to traffic or to construction equipment within the right-of-way shall wear high-visibility safety apparel meeting the requirements of ISEA "American National Standard for High-Visibility Apparel," or equivalent revisions, and labeled as ANSI 107-2004 standard performance for Class 2 or 3 risk exposure. Class 3 garments should be considered for high traffic volume work areas or night time work.

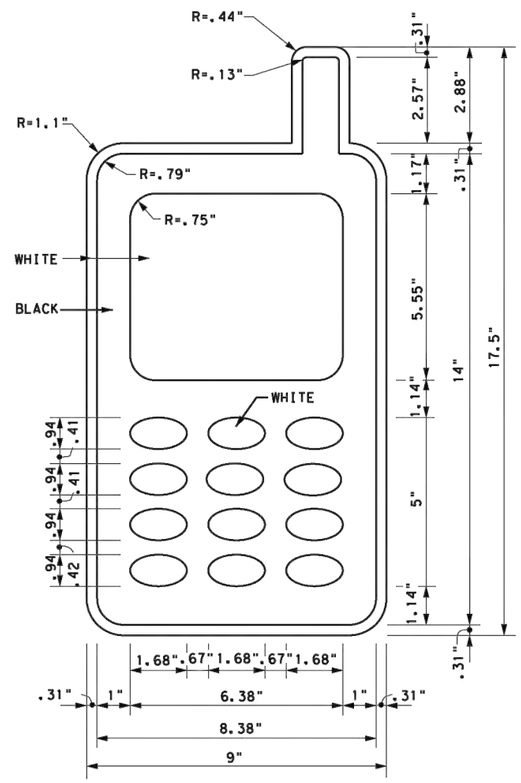

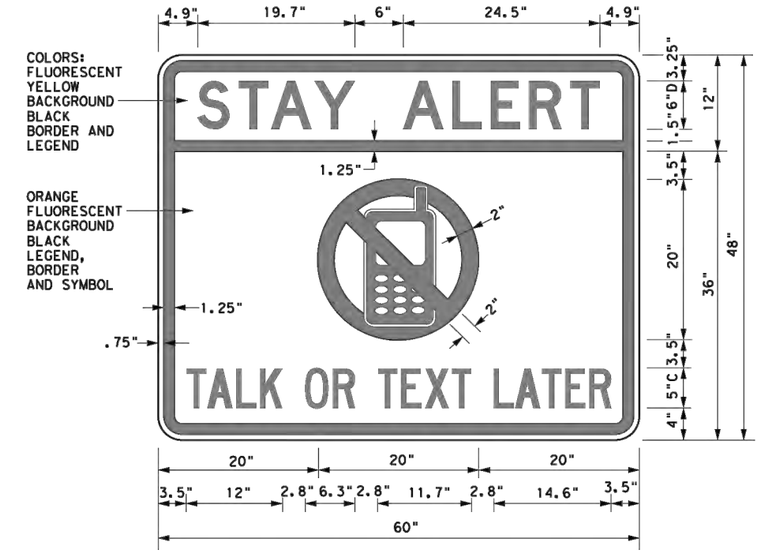

3.0" Radius, 1.25" Border, 0.75" Indent, Black on Yellow; [STAY ALERT] Font: D
3.0" Radius, 1.25" Border, 0.75" Indent, Black on Orange; [TALK OR TEXT LATER] Font: C specified length;

SIGN DETAIL (G20-10T)

Only pre-qualified products shall be used. The "Compliant Work Zone Traffic Control Devices List" (CWZTCD) describes pre-qualified products and their sources and may be found on-line at the web address given below or by contacting:

Texas Department of Transportation
Traffic Operations Division - TE
Phone (512) 416-3118

THE DOCUMENTS BELOW CAN BE FOUND ON-LINE AT http://www.txdot.gov
COMPLIANT WORK ZONE TRAFFIC CONTROL DEVICES LIST (CWZTCD)
DEPARTMENTAL MATERIAL SPECIFICATIONS (DMS)
MATERIAL PRODUCER LIST (MPL)
ROADWAY DESIGN MANUAL - SEE "MANUALS (ONLINE MANUALS)"
STANDARD HIGHWAY SIGN DESIGNS FOR TEXAS (SHSD)
TEXAS MANUAL ON UNIFORM TRAFFIC CONTROL DEVICES (TMUTCD)
TRAFFIC ENGINEERING STANDARD SHEETS

DATE:
FILE:

Texas Department of Transportation — Traffic Operations Division Standard

BARRICADE AND CONSTRUCTION GENERAL NOTES AND REQUIREMENTS

BC(1)-14

FILE: bc-14.dgn	DN: TxDOT	CK: TxDOT	DW: TxDOT	CK: TxDOT
© TxDOT November 2002	CONT	SECT	JOB	HIGHWAY
REVISIONS	0902	90	082	VA
4-03 5-10 8-14	DIST		COUNTY	SHEET NO.
9-07 7-13	FTW		TARRANT	20

TYPICAL LOCATION OF CROSSROAD SIGNS

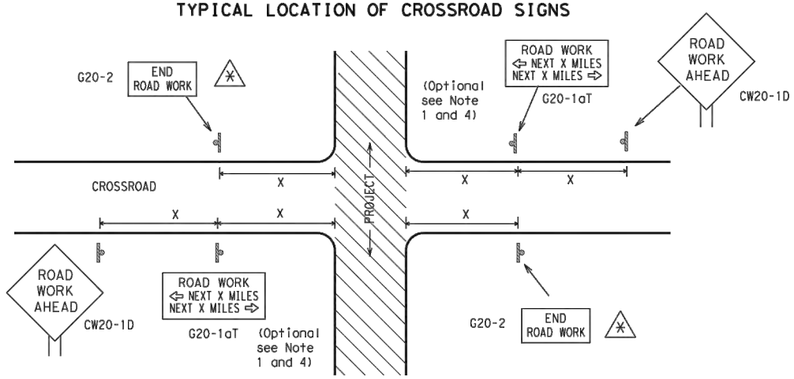

✱ May be mounted on back of "ROAD WORK AHEAD"(CW20-1D) sign with approval of Engineer. (See note 2 below)

1. The typical minimum signing on a crossroad approach should be a "ROAD WORK AHEAD" (CW20-1D)sign and a (G20-2) "END ROAD WORK" sign, unless noted otherwise in plans.
2. The Engineer may use the reduced size 36" x 36" ROAD WORK AHEAD (CW20-1D) sign mounted back to back with the reduced size 36" x 18" "END ROAD WORK"(G20-2) sign on low volume crossroads (see Note 4 under "Typical Construction Warning Sign Size and Spacing"). See the "Standard Highway Sign Designs for Texas" manual for sign details. The Engineer may omit the advance warning signs on low volume crossroads. The Engineer will determine whether a road is low volume. This information shall be shown in the plans.
3. Based on existing field conditions, the Engineer/Inspector may require additional signs such as FLAGGER AHEAD, LOOSE GRAVEL, or other appropriate signs. When additional signs are required, these signs will be considered part of the minimum requirements. The Engineer/Inspector will determine the proper location and spacing of any sign not shown on the BC sheets, Traffic Control Plan sheets or the Work Zone Standard Sheets.
4. The "ROAD WORK NEXT X MILES"(G20-1aT)sign shall be required at high volume crossroads to advise motorists of the length of construction in either direction from the intersection. The Engineer will determine whether a roadway is considered high volume.
5. Additional traffic control devices may be shown elsewhere in the plans for higher volume crossroads.
6. When work occurs in the intersection area, appropriate traffic control devices, as shown elsewhere in the plans or as determined by the Engineer/Inspector, shall be in place.

T-INTERSECTION

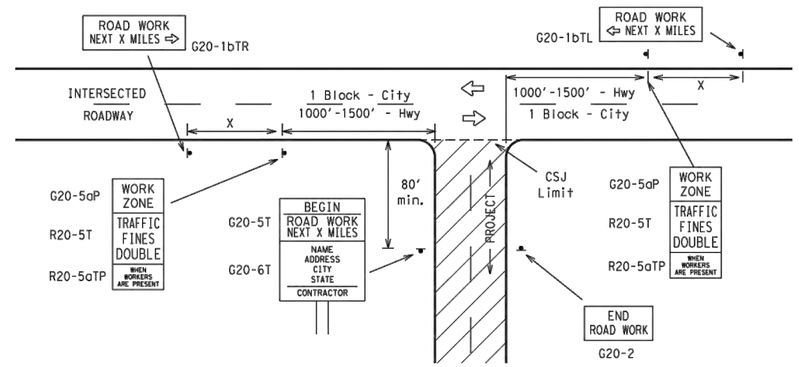

CSJ LIMITS AT T-INTERSECTION

1. The Engineer will determine the types and location of any additional traffic control devices, such as a flagger and accompanying signs, or other signs, that should be used when work is being performed at or near an intersection.
2. If construction closes the road at a T-intersection the Contractor shall place the "CONTRACTOR NAME"(G20-6T) sign behind the Type 3 Barricades for the road closure (see BC(10) also). The "ROAD WORK NEXT X MILES" left arrow(G20-1bTL) and "ROAD WORK NEXT X MILES" right arrow (G20-1bTR)" signs shall be replaced by the detour signing called for in the plans.

TYPICAL CONSTRUCTION WARNING SIGN SIZE AND SPACING[1,5,6]

SIZE

Sign Number or Series	Conventional Road	Expressway/ Freeway
CW20[4] CW21 CW22 CW23 CW25	48" x 48"	48" x 48"
CW1, CW2, CW7, CW8, CW9, CW11, CW14	36" x 36"	48" x 48"
CW3, CW4, CW5, CW6, CW8-3, CW10, CW12	48" x 48"	48" x 48"

SPACING

Posted Speed	Sign Spacing "X" △
MPH	Feet (Apprx.)
30	120
35	160
40	240
45	320
50	400
55	500[2]
60	600[2]
65	700[2]
70	800[2]
75	900[2]
80	1000[2]
✱	✱[3]

✱ For typical sign spacings on divided highways, expressways and freeways, see Part 6 of the "Texas Manual on Uniform Traffic Control Devices" (TMUTCD) typical application diagrams or TCP Standard Sheets.

△ Minimum distance from work area to first Advance Warning sign nearest the work area and/or distance between each additional sign.

GENERAL NOTES

1. Special or larger size signs may be used as necessary.
2. Distance between signs should be increased as required to have 1500 feet advance warning.
3. Distance between signs should be increased as required to have 1/2 mile or more advance warning.
4. 36" x 36" "ROAD WORK AHEAD" (CW20-1D)signs may be used on low volume crossroads at the discretion of the Engineer. See Note 2 under "Typical Location of Crossroad Signs".
5. Only diamond shaped warning sign sizes are indicated.
6. See sign size listing in "TMUTCD", Sign Appendix or the "Standard Highway Sign Designs for Texas" manual for complete list of available sign design sizes.

WORK AREAS IN MULTIPLE LOCATIONS WITHIN CSJ LIMITS

When extended distances occur between minimal work spaces, the Engineer/Inspector should ensure additional "ROAD WORK AHEAD"(CW20-1D)signs are placed in advance of these work areas to remind drivers they are still within the project limits. See the applicable TCP sheets for exact location and spacing of signs and channelizing devices.

SAMPLE LAYOUT OF SIGNING FOR WORK BEGINNING AT THE CSJ LIMITS

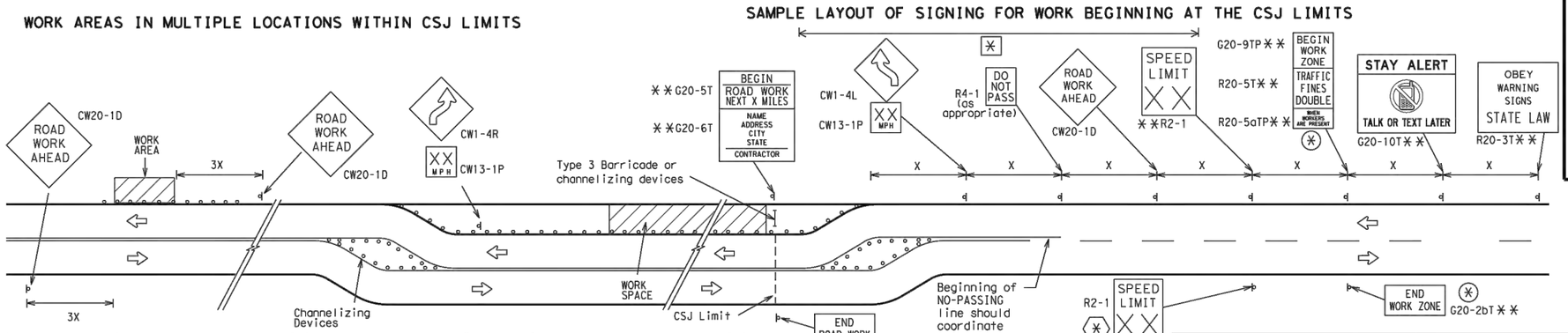

SAMPLE LAYOUT OF SIGNING FOR WORK BEGINNING DOWNSTREAM OF THE CSJ LIMITS

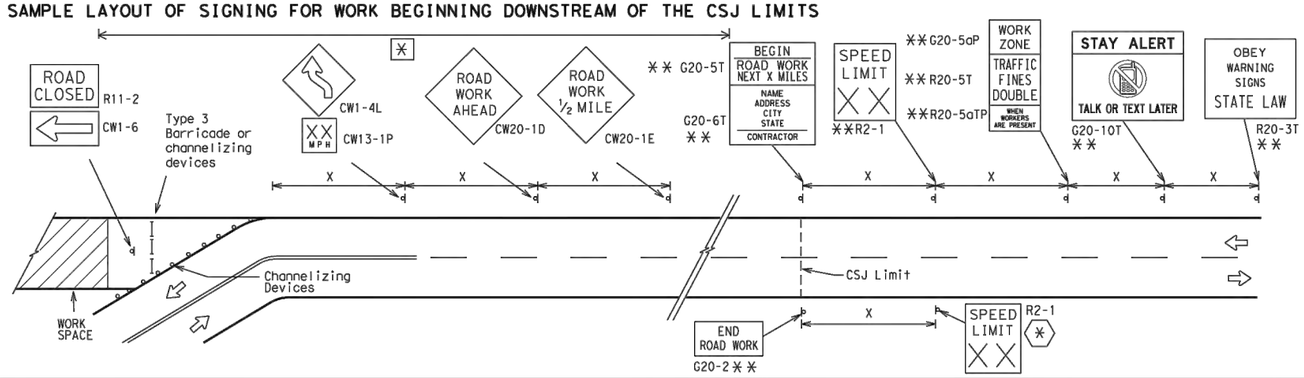

NOTES

The Contractor shall determine the appropriate distance to be placed on the G20-1 series signs and "BEGIN ROAD WORK NEXT X MILES"(G20-5T)sign for each specific project. This distance shall replace the "X" and shall be rounded to the nearest whole mile with the approval of the Engineer. No decimals shall be used.

✱ The "BEGIN WORK ZONE"(G20-9TP) and "END WORK ZONE" (G20-2bT) shall be used as shown on the sample layout when advance signs are required outside the CSJ Limits. They inform the motorist of entering or leaving a part of the work zone lying outside the CSJ Limits where traffic fines may double if workers are present.

✱✱ Required CSJ Limit signing. See Note 10 on BC(1). TRAFFIC FINES DOUBLE signs will not be required on projects consisting solely of mobile operations work.

✱ Area for placement of "ROAD WORK AHEAD" (CW20-1D)sign and other signs or devices as called for on the Traffic Control Plan.

✱ Contractor will install a regulatory speed limit sign at the end of the work zone.

LEGEND

⊢⊣	Type 3 Barricade
○ ○ ○	Channelizing Devices
▬	Sign
X	See Typical Construction Warning Sign Size and Spacing chart or the TMUTCD for sign spacing requirements.

SHEET 2 OF 12

Texas Department of Transportation — Traffic Operations Division Standard

BARRICADE AND CONSTRUCTION PROJECT LIMIT

BC(2)-14

FILE: bc-14.dgn	DN: TxDOT	CK: TxDOT	DW: TxDOT	CK: TxDOT
© TxDOT November 2002	CONT	SECT	JOB	HIGHWAY
REVISIONS	0902	90	082	VA
9-07 8-14	DIST		COUNTY	SHEET NO.
7-13	FTW		TARRANT	21

DATE:
FILE:

TYPICAL APPLICATION OF WORK ZONE SPEED LIMIT SIGNS

Work zone speed limits shall be regulatory, established in accordance with the "Procedures for Establishing Speed Zones," and approved by the Texas Transportation Commission, or by City Ordinance when within Incorporated City Limits.

Reduced speeds should only be posted in the vicinity of work activity and not throughout the entire project.

Regulatory work zone speed signs (R2-1) shall be removed or covered during periods when they are not needed.

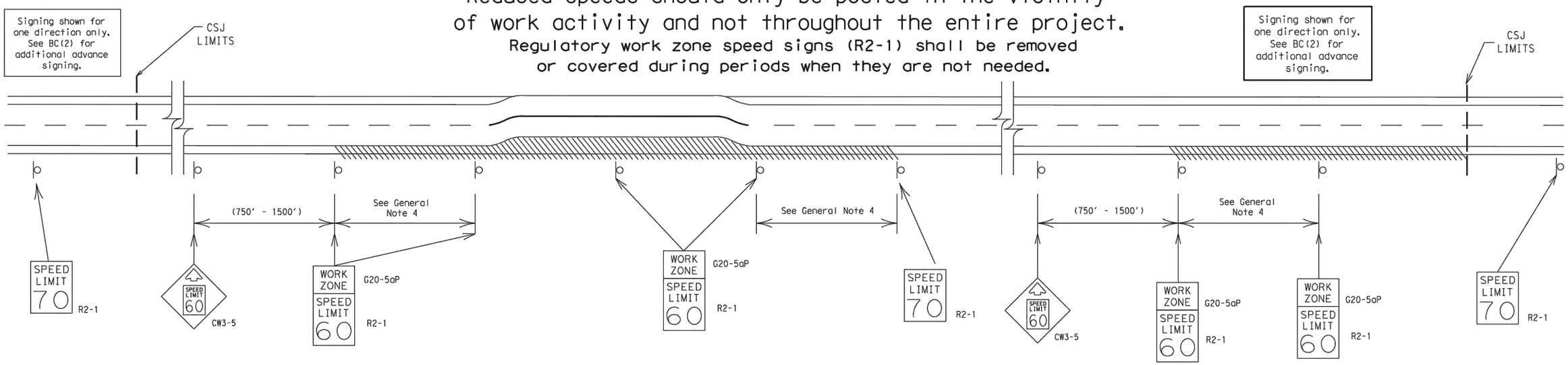

GUIDANCE FOR USE:

LONG/INTERMEDIATE TERM WORK ZONE SPEED LIMITS

This type of work zone speed limit should be included on the design of the traffic control plans when restricted geometrics with a lower design speed are present in the work zone and modification of the geometrics to a higher design speed is not feasible.

Long/Intermediate Term Work Zone Speed Limit signs, when approved as described above, should be posted and visible to the motorist when work activity is present. Work activity may also be defined as a change in the roadway that requires a reduced speed for motorists to safely negotiate the work area, including:

a) rough road or damaged pavement surface
b) substantial alteration of roadway geometrics (diversions)
c) construction detours
d) grade
e) width
f) other conditions readily apparent to the driver

As long as any of these conditions exist, the work zone speed limit signs should remain in place.

SHORT TERM WORK ZONE SPEED LIMITS

This type of work zone speed limit may be included on the design of the traffic control plans when workers or equipment are not behind concrete barrier, when work activity is within 10 feet of the traveled way or actually in the travelled way.

Short Term Work Zone Speed Limit signs should be posted and visible to the motorists only when work activity is present. When work activity is not present, signs shall be removed or covered.
(See Removing or Covering on BC(4)).

GENERAL NOTES

1. Regulatory work zone speed limits should be used only for sections of construction projects where speed control is of major importance.
2. Regulatory work zone speed limit signs shall be placed on supports at a 7 foot minimum mounting height.
3. Speed zone signs are illustrated for one direction of travel and are normally posted for each direction of travel.
4. Frequency of work zone speed limit signs should be:
   40 mph and greater 0.2 to 2 miles
   35 mph and less 0.2 to 1 mile
5. Regulatory speed limit signs shall have black legend and border on a white reflective background (See "Reflective Sheeting" on BC(4)).
6. Fabrication, erection and maintenance of the"ADVANCE SPEED LIMIT"(CW3-5)sign, "WORK ZONE"(G20-5aP) plaque and the "SPEED LIMIT"(R2-1)signs shall not be paid for directly, but shall be considered subsidiary to Item 502.
7. Turning signs from view, laying signs over or down will not be allowed, unless as otherwise noted under "REMOVING OR COVERING" on BC(4).
8. Techniques that may help reduce traffic speeds include but are not limited to:
   A. Law enforcement.
   B. Flagger stationed next to sign.
   C. Portable changeable message sign (PCMS).
   D. Low-power (drone) radar transmitter.
   E. Speed monitor trailers or signs.
9. Speeds shown on details above are for illustration only. Work Zone Speed Limits should only be posted as approved for each project.
10. For more specific guidance concerning the type of work, work zone conditions and factors impacting allowable regulatory construction speed zone reduction see TxDOT form #1204 in the TxDOT e-form system.

DATE:
FILE:

SHEET 3 OF 12

Texas Department of Transportation — Traffic Operations Division Standard

BARRICADE AND CONSTRUCTION WORK ZONE SPEED LIMIT

BC(3)-14

FILE: bc-14.dgn	DN: TxDOT	CK: TxDOT	DW: TxDOT	CK: TxDOT
© TxDOT November 2002	CONT	SECT	JOB	HIGHWAY
REVISIONS 9-07 8-14 7-13	0902	90	082	VA
	DIST	COUNTY		SHEET NO.
	FTW	TARRANT		22

TYPICAL MINIMUM CLEARANCES FOR LONG TERM AND INTERMEDIATE TERM SIGNS

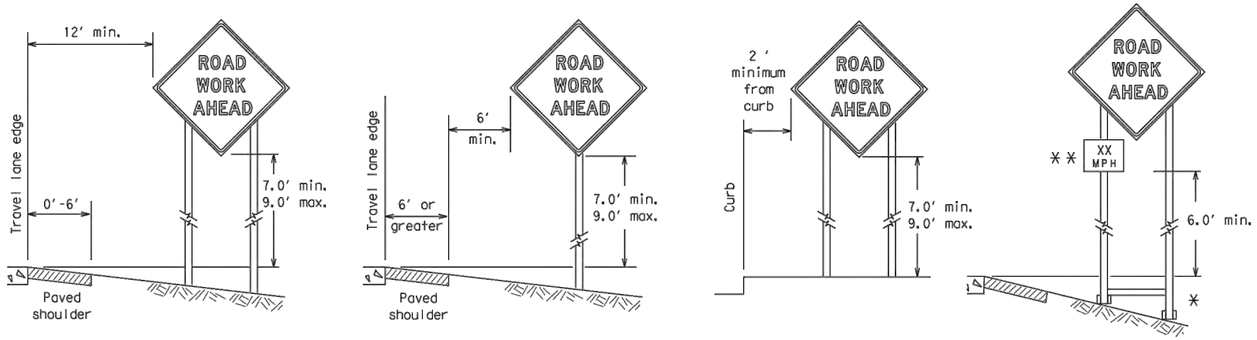

✳ When placing skid supports on unlevel ground, the leg post lengths must be adjusted so the sign appears straight and plumb. Objects shall NOT be placed under skids as a means of leveling.

✳✳ When plaques are placed on dual-leg supports, they should be attached to the upright nearest the travel lane. Supplemental plaques (advisory or distance) should not cover the surface of the parent sign.

ATTACHMENT FOR SIGN SUPPORTS

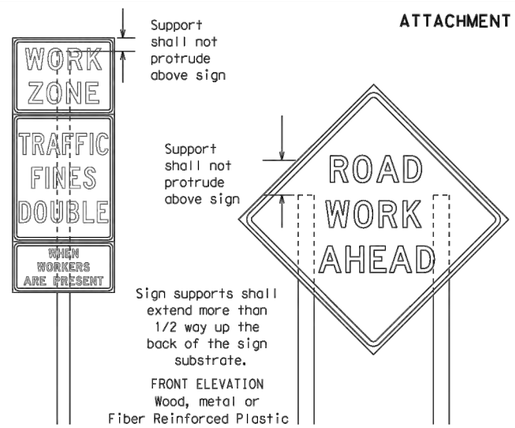

Splicing embedded perforated square metal tubing in order to extend post height will only be allowed when the splice is made using four bolts, two above and two below the spice point. Splice must be located entirely behind the sign substrate, not near the base of the support. Splice insert lengths should be at least 5 times nominal post size, centered on the splice and of at least the same gauge material.

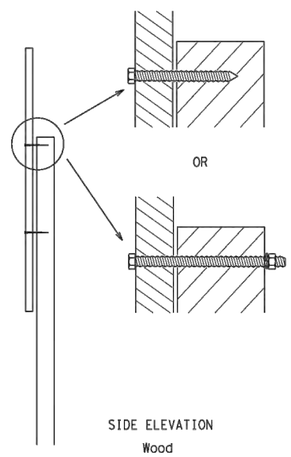

Attachment to wooden supports will be by bolts and nuts or screws. Use TxDOT's or manufacturer's recommended procedures for attaching sign substrates to other types of sign supports

Nails shall NOT be allowed. Each sign shall be attached directly to the sign support. Multiple signs shall not be joined or spliced by any means. Wood supports shall not be extended or repaired by splicing or other means.

STOP/SLOW PADDLES

1. STOP/SLOW paddles are the primary method to control traffic by flaggers. The STOP/SLOW paddle size should be 24" x 24" as detailed below.
2. When used at night, the STOP/SLOW paddle shall be retroreflectorized.
3. STOP/SLOW paddles may be attached to a staff with a minimum length of 6' to the bottom of the sign.
4. Any lights incorporated into the STOP or SLOW paddle faces shall only be as specifically described in Section 6E.03 Hand Signaling Devices in the TMUTCD.

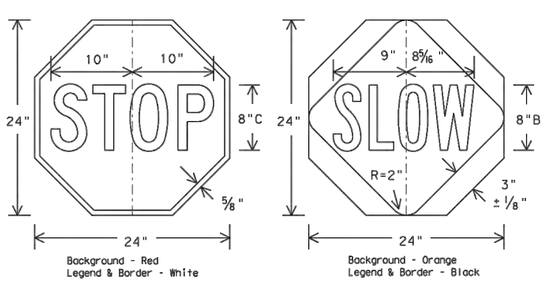

CONTRACTOR REQUIREMENTS FOR MAINTAINING PERMANENT SIGNS WITHIN THE PROJECT LIMITS

1. Permanent signs are used to give notice of traffic laws or regulations, call attention to conditions that are potentially hazardous to traffic operations, show route designations, destinations, directions, distances, services, points of interest, and other geographical, recreational, or cultural information. Drivers proceeding through a work zone need the same, if not better route guidance as normally installed on a roadway without construction.
2. When permanent regulatory or warning signs conflict with work zone conditions, remove or cover the permanent signs until the permanent sign message matches the roadway condition.
3. When existing permanent signs are moved and relocated due to construction purposes, they shall be visible to motorists at all times.
4. If existing signs are to be relocated on their original supports, they shall be installed on crashworthy bases as shown on the SMD Standard sheets. The signs shall meet the required mounting heights shown on the BC Sheets or the SMD Standards. This work should be paid for under the appropriate pay item for relocating existing signs.
5. If permanent signs are to be removed and relocated using temporary supports, the Contractor shall use crashworthy supports as shown on the BC sheets or the CWZTCD. The signs shall meet the required mounting heights shown on the BC Sheets or the SMD Standards during construction. This work should be paid for under the appropriate pay item for relocating existing signs.
6. Any sign or traffic control device that is struck or damaged by the Contractor or his/her construction equipment shall be replaced as soon as possible by the Contractor to ensure proper guidance for the motorists. This will be subsidiary to Item 502.

GENERAL NOTES FOR WORK ZONE SIGNS

1. Contractor shall install and maintain signs in a straight and plumb condition and/or as directed by the Engineer.
2. Wooden sign posts shall be painted white.
3. Barricades shall NOT be used as sign supports.
4. All signs shall be installed in accordance with the plans or as directed by the Engineer. Signs shall be used to regulate, warn, and guide the traveling public safely through the work zone.
5. The Contractor may furnish either the sign design shown in the plans or in the "Standard Highway Sign Designs for Texas" (SHSD). The Engineer/Inspector may require the Contractor to furnish other work zone signs that are shown in the TMUTCD but may have been omitted from the plans. Any variation in the plans shall be documented by written agreement between the Engineer and the Contractor's Responsible Person. All changes must be documented in writing before being implemented. This can include documenting the changes in the Inspector's TxDOT diary and having both the Inspector and Contractor initial and date the agreed upon changes.
6. The Contractor shall furnish sign supports listed in the "Compliant Work Zone Traffic Control Device List" (CWZTCD). The Contractor shall install the sign support in accordance with the manufacturer's recommendations. If there is a question regarding installation procedures, the Contractor shall furnish the Engineer a copy of the manufacturer's installation recommendations so the Engineer can verify the correct procedures are being followed.
7. The Contractor is responsible for installing signs on approved supports and replacing signs with damaged or cracked substrates and/or damaged or marred reflective sheeting as directed by the Engineer/Inspector.
8. Identification markings may be shown only on the back of the sign substrate. The maximum height of letters and/or company logos used for identification shall be 1 inch.
9. The Contractor shall replace damaged wood posts. New or damaged wood sign posts shall not be spliced.

DURATION OF WORK (as defined by the "Texas Manual on Uniform Traffic Control Devices" Part 6)

1. The types of sign supports, sign mounting height, the size of signs, and the type of sign substrates can vary based on the type of work being performed. The Engineer is responsible for selecting the appropriate size sign for the type of work being performed. The Contractor is responsible for ensuring the sign support, sign mounting height and substrate meets manufacturer's recommendations in regard to crashworthiness and duration of work requirements.
   a. Long-term stationary - work that occupies a location more than 3 days.
   b. Intermediate-term stationary - work that occupies a location more than one daylight period up to 3 days, or nighttime work lasting more than one hour.
   c. Short-term stationary - daytime work that occupies a location for more than 1 hour in a single daylight period.
   d. Short, duration - work that occupies a location up to 1 hour.
   e. Mobile - work that moves continuously or intermittently (stopping for up to approximately 15 minutes.)

SIGN MOUNTING HEIGHT

1. The bottom of Long-term/Intermediate-term signs shall be at least 7 feet, but not more than 9 feet, above the paved surface, except as shown for supplemental plaques mounted below other signs.
2. The bottom of Short-term/Short Duration signs shall be a minimum of 1 foot above the pavement surface but no more than 2 feet above the ground.
3. Long-term/Intermediate-term Signs may be used in lieu of Short-term/Short Duration signing.
4. Short-term/Short Duration signs shall be used only during daylight and shall be removed at the end of the workday or raised to appropriate Long-term/Intermediate sign height.
5. Regulatory signs shall be mounted at least 7 feet, but not more than 9 feet, above the paved surface regardless of work duration.

SIZE OF SIGNS

1. The Contractor shall furnish the sign sizes shown on BC (2) unless otherwise shown in the plans or as directed by the Engineer.

SIGN SUBSTRATES

1. The Contractor shall ensure the sign substrate is installed in accordance with the manufacturer's recommendations for the type of sign support that is being used. The CWZTCD lists each substrate that can be used on the different types and models of sign supports.
2. "Mesh" type materials are NOT an approved sign substrate, regardless of the tightness of the weave.
3. All wooden individual sign panels fabricated from 2 or more pieces shall have one or more plywood cleat, 1/2" thick by 6" wide, fastened to the back of the sign and extending fully across the sign. The cleat shall be attached to the back of the sign using wood screws that do not penetrate the face of the sign panel. The screws shall be placed on both sides of the splice and spaced at 6" centers. The Engineer may approve other methods of splicing the sign face.

REFLECTIVE SHEETING

1. All signs shall be retroreflective and constructed of sheeting meeting the color and retro-reflectivity requirements of DMS-8300 for rigid signs or DMS-8310 for roll-up signs. The web address for DMS specifications is shown on BC(1).
2. White sheeting, meeting the requirements of DMS-8300 Type A, shall be used for signs with a white background.
3. Orange sheeting, meeting the requirements of DMS-8300 Type B_{FL} or Type C_{FL}, shall be used for rigid signs with orange backgrounds.

SIGN LETTERS

1. All sign letters and numbers shall be clear, and open rounded type uppercase alphabet letters as approved by the Federal Highway Administration (FHWA) and as published in the "Standard Highway Sign Design for Texas" manual. Signs, letters and numbers shall be of first class workmanship in accordance with Department Standards and Specifications.

REMOVING OR COVERING

1. When sign messages may be confusing or do not apply, the signs shall be removed or completely covered.
2. Long-term stationary or intermediate stationary signs installed on square metal tubing may be turned away from traffic 90 degrees when the sign message is not applicable. This technique may not be used for signs installed in the median of divided highways or near any intersections where the sign may be seen from approaching traffic.
3. Signs installed on wooden skids shall not be turned at 90 degree angles to the roadway. These signs should be removed or completely covered when not required.
4. When signs are covered, the material used shall be opaque, such as heavy mil black plastic, or other materials which will cover the entire sign face and maintain their opaque properties under automobile headlights at night, without damaging the sign sheeting.
5. Burlap shall NOT be used to cover signs.
6. Duct tape or other adhesive material shall NOT be affixed to a sign face.
7. Signs and anchor stubs shall be removed and holes backfilled upon completion of work.

SIGN SUPPORT WEIGHTS

1. Where sign supports require the use of weights to keep from turning over, the use of sandbags with dry, cohesionless sand should be used.
2. The sandbags will be tied shut to keep the sand from spilling and to maintain a constant weight.
3. Rock, concrete, iron, steel or other solid objects shall not be permitted for use as sign support weights.
4. Sandbags should weigh a minimum of 35 lbs and a maximum of 50 lbs.
5. Sandbags shall be made of a durable material that tears upon vehicular impact. Rubber (such as tire inner tubes) shall NOT be used.
6. Rubber ballasts designed for channelizing devices should not be used for ballast on portable sign supports. Sign supports designed and manufactured with rubber bases may be used when shown on the CWZTCD list.
7. Sandbags shall only be placed along or laid over the base supports of the traffic control device and shall not be suspended above ground level or hung with rope, wire, chains or other fasteners. Sandbags shall be placed along the length of the skids to weigh down the sign support.
8. Sandbags shall NOT be placed under the skid and shall not be used to level sign supports placed on slopes.

FLAGS ON SIGNS

1. Flags may be used to draw attention to warning signs. When used the flag shall be 16 inches square or larger and shall be orange or fluorescent red-orange in color. Flags shall not be allowed to cover any portion of the sign face.

Texas Department of Transportation — Traffic Operations Division Standard

BARRICADE AND CONSTRUCTION TEMPORARY SIGN NOTES

BC(4)-14

FILE: bc-14.dgn	DN: TxDOT	CK: TxDOT	DW: TxDOT	CK: TxDOT
©TxDOT November 2002	CONT	SECT	JOB	HIGHWAY
REVISIONS	0902	90	082	VA
9-07 8-14	DIST		COUNTY	SHEET NO.
7-13	FTW		TARRANT	23

DATE:
FILE:

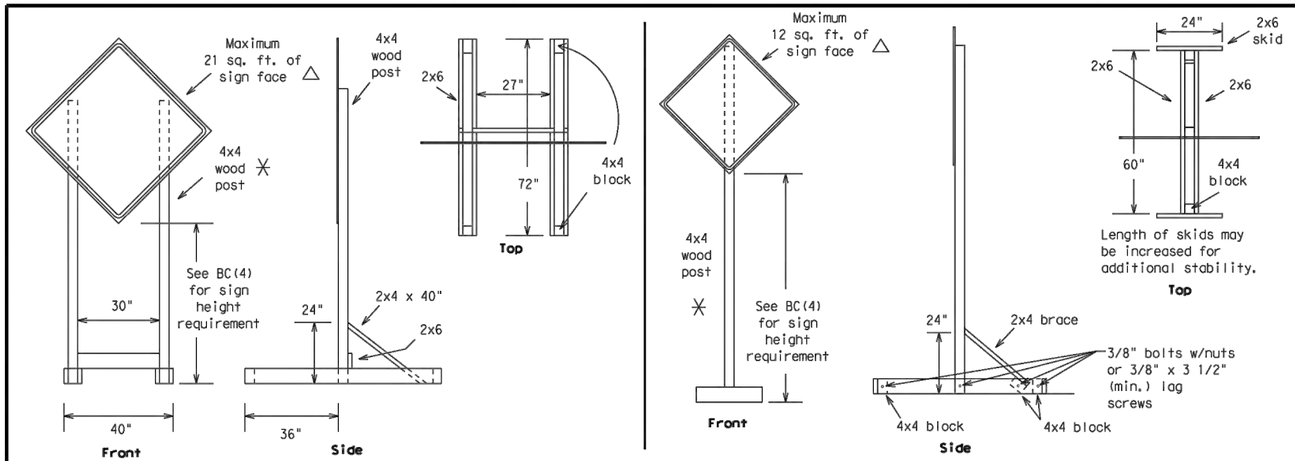

SKID MOUNTED WOOD SIGN SUPPORTS

LONG/INTERMEDIATE TERM STATIONARY - PORTABLE SKID MOUNTED SIGN SUPPORTS □

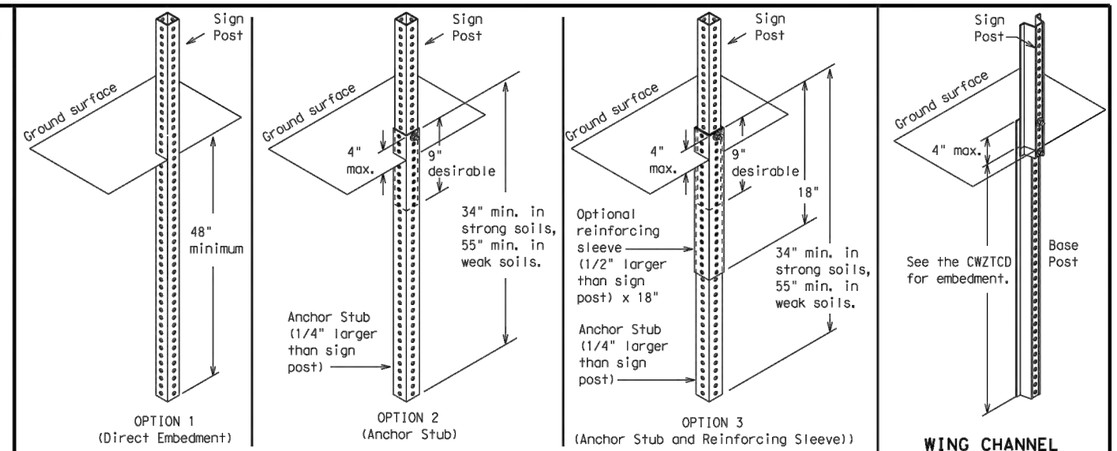

PERFORATED SQUARE METAL TUBING

WING CHANNEL
Lap-splice/base bolted anchor

GROUND MOUNTED SIGN SUPPORTS

Refer to the CWZTCD and the manufacturer's installation procedure for each type sign support.
The maximum sign square footage shall adhere to the manufacturer's recommendation.
Two post installations can be used for larger signs.

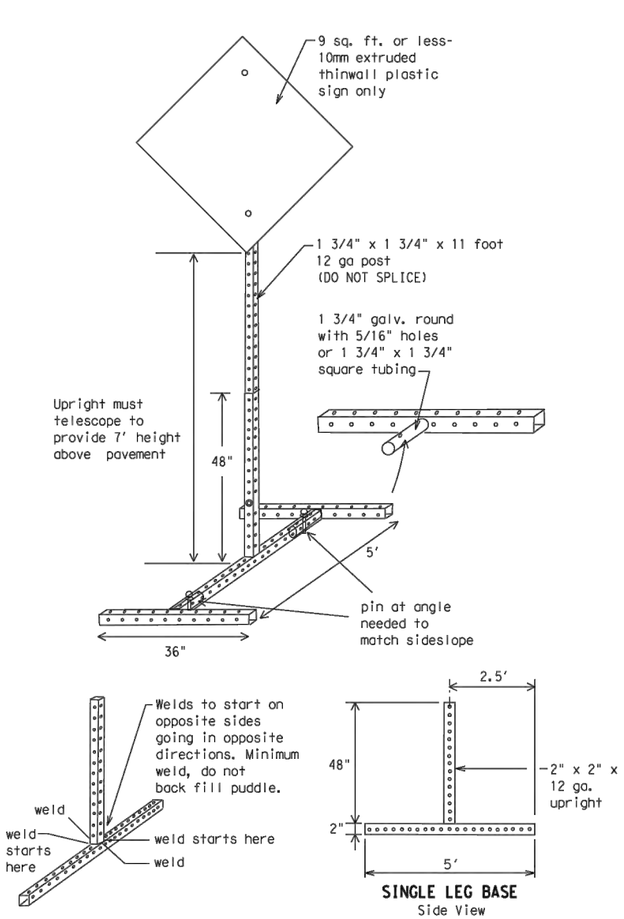

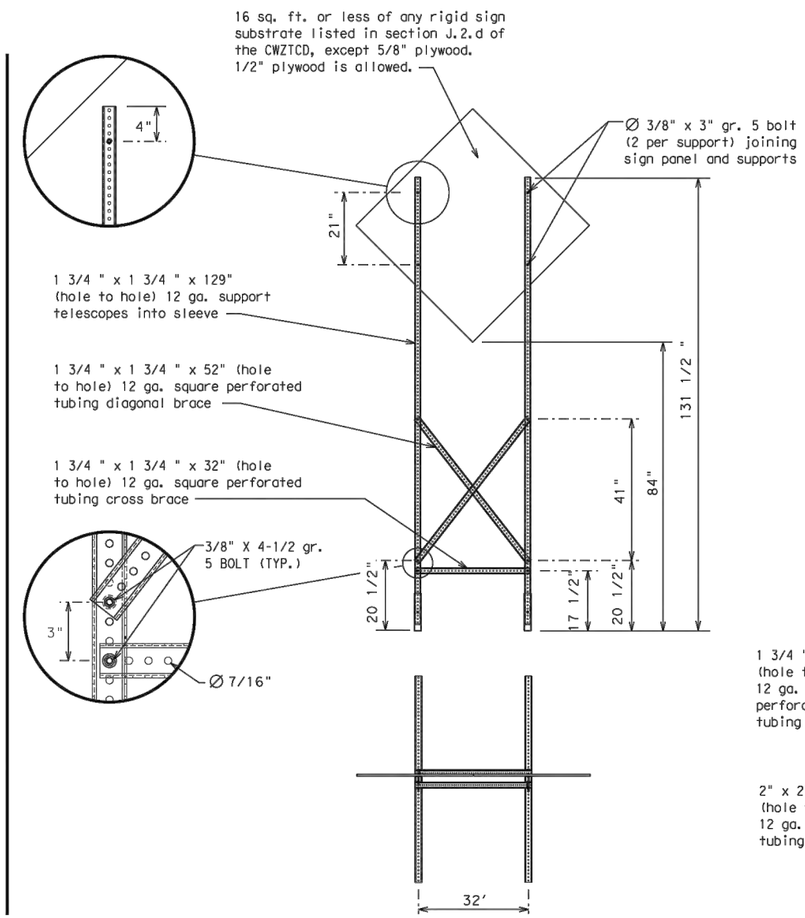

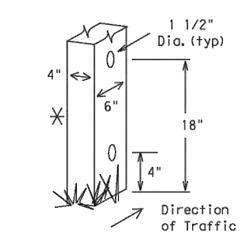

Nominal Post Size	Number of Posts	Maximum Sq. feet of Sign Face	Minimum Soil Embedment	Drilled Hole(s) Required
4 x 4	1	12	36"	NO
4 x 4	2	21	36"	NO
4 x 6	1	21	36"	YES
4 x 6	2	36	36"	YES

WOOD POST SYSTEM FOR GROUND MOUNTED SIGN SUPPORTS

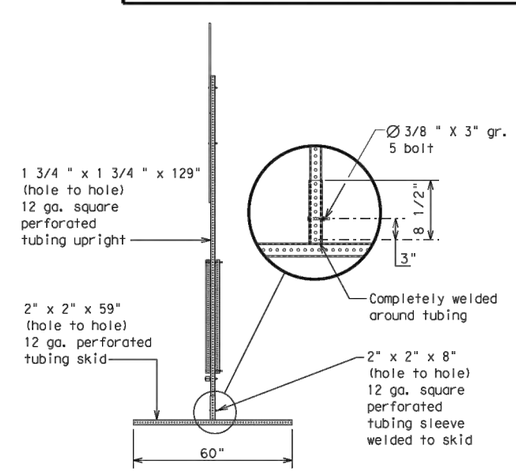

SKID MOUNTED PERFORATED SQUARE STEEL TUBING SIGN SUPPORTS

WEDGE ANCHORS

Both steel and plastic Wedge Anchor Systems as shown on the SMD Standard Sheets may be used as temporary sign supports for signs up to 10 square feet of sign face. They may be set in concrete or in sturdy soils if approved by the Engineer. (See web address for "Traffic Engineering Standard Sheets" on BC(1)).

OTHER DESIGNS

MORE DETAILS OF APPROVED LONG/INTERMEDIATE AND SHORT TERM SUPPORTS CAN BE FOUND ON THE CWZTCD LIST. SEE BC(1) FOR WEBSITE LOCATION.

GENERAL NOTES

1. Nails may be used in the assembly of wooden sign supports, but 3/8" bolts with nuts or 3/8" x 3 1/2" lag screws must be used on every joint for final connection.
2. No more than 2 sign posts shall be placed within a 7 ft. circle, except for specific materials noted on the CWZTCD List.
3. When project is completed, all sign supports and foundations shall be removed from the project site. This will be considered subsidiary to Item 502.

□ See BC(4) for definition of "Work Duration."

✳ Wood sign posts MUST be one piece. Splicing will NOT be allowed. Posts shall be painted white.

△ See the CWZTCD for the type of sign substrate that can be used for each approved sign support.

Texas Department of Transportation — Traffic Operations Division Standard

BARRICADE AND CONSTRUCTION TYPICAL SIGN SUPPORT

BC(5)-14

FILE: bc-14.dgn	DN: TxDOT	CK: TxDOT	DW: TxDOT	CK: TxDOT
© TxDOT November 2002	CONT	SECT	JOB	HIGHWAY
REVISIONS	0902	90	082	VA
9-07 8-14	DIST		COUNTY	SHEET NO.
7-13	FTW		TARRANT	24

DATE:
FILE:

WHEN NOT IN USE, REMOVE THE PCMS FROM THE RIGHT-OF-WAY OR PLACE THE PCMS BEHIND BARRIER OR GUARDRAIL WITH SIGN PANEL TURNED PARALLEL TO TRAFFIC

PORTABLE CHANGEABLE MESSAGE SIGNS

1. The Engineer/Inspector shall approve all messages used on portable changeable message signs (PCMS).
2. Messages on PCMS should contain no more than 8 words (about four to eight characters per word), not including simple words such as "TO," "FOR," "AT," etc.
3. Messages should consist of a single phase, or two phases that alternate. Three-phase messages are not allowed. Each phase of the message should convey a single thought, and must be understood by itself.
4. Use the word "EXIT" to refer to an exit ramp on a freeway; i.e., "EXIT CLOSED." Do not use the term "RAMP."
5. Always use the route or interstate designation (IH, US, SH, FM) along with the number when referring to a roadway.
6. When in use the bottom of a stationary PCMS message panel should be a minimum 7 feet above the roadway, where possible.
7. The message term "WEEKEND" should be used only if the work is to start on Saturday morning and end by Sunday evening at midnight. Actual days and hours of work should be displayed on the PCMS if work is to begin on Friday evening and/or continue into Monday morning.
8. The Engineer/Inspector may select one of two options which are available for displaying a two-phase message on a PCMS. Each phase may be displayed for either four seconds each or for three seconds each.
9. Do not "flash" messages or words included in a message. The message should be steady burn or continuous while displayed.
10. Do not present redundant information on a two-phase message; i.e., keeping two lines of the message the same and changing the third line.
11. Do not use the word "Danger" in message.
12. Do not display the message "LANES SHIFT LEFT" or "LANES SHIFT RIGHT" on a PCMS. Drivers do not understand the message.
13. Do not display messages that scroll horizontally or vertically across the face of the sign.
14. The following table lists abbreviated words and two-word phrases that are acceptable for use on a PCMS. Both words in a phrase must be displayed together. Words or phrases not on this list should not be abbreviated, unless shown in the TMUTCD.
15. PCMS character height should be at least 18 inches for trailer mounted units. They should be visible from at least 1/2 (.5) mile and the text should be legible from at least 600 feet at night and 800 feet in daylight. Truck mounted units must have a character height of 10 inches and must be legible from at least 400 feet.
16. Each line of text should be centered on the message board rather than left or right justified.
17. If disabled, the PCMS should default to an illegible display that will not alarm motorists and will only be used to alert workers that the PCMS has malfunctioned. A pattern such as a series of horizontal solid bars is appropriate.

WORD OR PHRASE	ABBREVIATION
Access Road	ACCS RD
Alternate	ALT
Avenue	AVE
Best Route	BEST RTE
Boulevard	BLVD
Bridge	BRDG
Cannot	CANT
Center	CTR
Construction Ahead	CONST AHD
CROSSING	XING
Detour Route	DETOUR RTE
Do Not	DONT
East	E
Eastbound	(route) E
Emergency	EMER
Emergency Vehicle	EMER VEH
Entrance, Enter	ENT
Express Lane	EXP LN
Expressway	EXPWY
XXXX Feet	XXXX FT
Fog Ahead	FOG AHD
Freeway	FRWY, FWY
Freeway Blocked	FWY BLKD
Friday	FRI
Hazardous Driving	HAZ DRIVING
Hazardous Material	HAZMAT
High-Occupancy	HOV
Vehicle Highway	HWY
Hour(s)	HR, HRS
Information	INFO
It Is	ITS
Junction	JCT
Left	LFT
Left Lane	LFT LN
Lane Closed	LN CLOSED
Lower Level	LWR LEVEL
Maintenance	MAINT

WORD OR PHRASE	ABBREVIATION
Major	MAJ
Miles	MI
Miles Per Hour	MPH
Minor	MNR
Monday	MON
Normal	NORM
North	N
Northbound	(route) N
Parking	PKING
Road	RD
Right Lane	RT LN
Saturday	SAT
Service Road	SERV RD
Shoulder	SHLDR
Slippery	SLIP
South	S
Southbound	(route) S
Speed	SPD
Street	ST
Sunday	SUN
Telephone	PHONE
Temporary	TEMP
Thursday	THURS
To Downtown	TO DWNTN
Traffic	TRAF
Travelers	TRVLRS
Tuesday	TUES
Time Minutes	TIME MIN
Upper Level	UPR LEVEL
Vehicles (s)	VEH, VEHS
Warning	WARN
Wednesday	WED
Weight Limit	WT LIMIT
West	W
Westbound	(route) W
Wet Pavement	WET PVMT
Will Not	WONT

Roadway designation # IH-number, US-number, SH-number, FM-number

RECOMMENDED PHASES AND FORMATS FOR PCMS MESSAGES DURING ROADWORK ACTIVITIES

(The Engineer may approve other messages not specifically covered here.)

Phase 1: Condition Lists

Road/Lane/Ramp Closure List

FREEWAY CLOSED X MILE	FRONTAGE ROAD CLOSED
ROAD CLOSED AT SH XXX	SHOULDER CLOSED XXX FT
ROAD CLSD AT FM XXXX	RIGHT LN CLOSED XXX FT
RIGHT X LANES CLOSED	RIGHT X LANES OPEN
CENTER LANE CLOSED	DAYTIME LANE CLOSURES
NIGHT LANE CLOSURES	I-XX SOUTH EXIT CLOSED
VARIOUS LANES CLOSED	EXIT XXX CLOSED X MILE
EXIT CLOSED	RIGHT LN TO BE CLOSED
MALL DRIVEWAY CLOSED	X LANES CLOSED TUE - FRI
XXXXXXXX BLVD CLOSED	

Other Condition List

ROADWORK XXX FT	ROAD REPAIRS XXXX FT
FLAGGER XXXX FT	LANE NARROWS XXXX FT
RIGHT LN NARROWS XXXX FT	TWO-WAY TRAFFIC XX MILE
MERGING TRAFFIC XXXX FT	CONST TRAFFIC XXX FT
LOOSE GRAVEL XXXX FT	UNEVEN LANES XXXX FT
DETOUR X MILE	ROUGH ROAD XXXX FT
ROADWORK PAST SH XXXX	ROADWORK NEXT FRI-SUN
BUMP XXXX FT	US XXX EXIT X MILES
TRAFFIC SIGNAL XXXX FT	LANES SHIFT *

* LANES SHIFT in Phase 1 must be used with STAY IN LANE in Phase 2.

Phase 2: Possible Component Lists

Action to Take/Effect on Travel List

MERGE RIGHT	FORM X LINES RIGHT
DETOUR NEXT X EXITS	USE XXXXX RD EXIT
USE EXIT XXX	USE EXIT I-XX NORTH
STAY ON US XXX SOUTH	USE I-XX E TO I-XX N
TRUCKS USE US XXX N	WATCH FOR TRUCKS
WATCH FOR TRUCKS	EXPECT DELAYS
EXPECT DELAYS	PREPARE TO STOP
REDUCE SPEED XXX FT	END SHOULDER USE
USE OTHER ROUTES	WATCH FOR WORKERS
STAY IN LANE *	

Location List

AT FM XXXX
BEFORE RAILROAD CROSSING
NEXT X MILES
PAST US XXX EXIT
XXXXXXX TO XXXXXXX
US XXX TO FM XXXX

Warning List

SPEED LIMIT XX MPH
MAXIMUM SPEED XX MPH
MINIMUM SPEED XX MPH
ADVISORY SPEED XX MPH
RIGHT LANE EXIT
USE CAUTION
DRIVE SAFELY
DRIVE WITH CARE

** Advance Notice List

TUE-FRI XX AM- X PM
APR XX- XX X PM-X AM
BEGINS MONDAY
BEGINS MAY XX
MAY X-X XX PM - XX AM
NEXT FRI-SUN
XX AM TO XX PM
NEXT TUE AUG XX
TONIGHT XX PM- XX AM

** See Application Guidelines Note 6.

APPLICATION GUIDELINES

1. Only 1 or 2 phases are to be used on a PCMS.
2. The 1st phase (or both) should be selected from the "Road/Lane/Ramp Closure List" and the "Other Condition List".
3. A 2nd phase can be selected from the "Action to Take/Effect on Travel, Location, General Warning, or Advance Notice Phase Lists".
4. A Location Phase is necessary only if a distance or location is not included in the first phase selected.
5. If two PCMS are used in sequence, they must be separated by a minimum of 1000 ft. Each PCMS shall be limited to two phases, and should be understandable by themselves.
6. For advance notice, when the current date is within seven days of the actual work date, calendar days should be replaced with days of the week. Advance notification should typically be for no more than one week prior to the work.

WORDING ALTERNATIVES

1. The words RIGHT, LEFT and ALL can be interchanged as appropriate.
2. Roadway designations IH, US, SH, FM and LP can be interchanged as appropriate.
3. EAST, WEST, NORTH and SOUTH (or abbreviations E, W, N and S) can be interchanged as appropriate.
4. Highway names and numbers replaced as appropriate.
5. ROAD, HIGHWAY and FREEWAY can be interchanged as needed.
6. AHEAD may be used instead of distances if necessary.
7. FT and MI, MILE and MILES interchanged as appropriate.
8. AT, BEFORE and PAST interchanged as needed.
9. Distances or AHEAD can be eliminated from the message if a location phase is used.

PCMS SIGNS WITHIN THE R.O.W. SHALL BE BEHIND GUARDRAIL OR CONCRETE BARRIER OR SHALL HAVE A MINIMUM OF FOUR (4) PLASTIC DRUMS PLACED PERPENDICULAR TO TRAFFIC ON THE UPSTREAM SIDE OF THE PCMS, WHEN EXPOSED TO ONE DIRECTION OF TRAFFIC. WHEN EXPOSED TO TWO WAY TRAFFIC, THE FOUR DRUMS SHOULD BE PLACED WITH ONE DRUM AT EACH OF THE FOUR CORNERS OF THE UNIT.

FULL MATRIX PCMS SIGNS

1. When Full Matrix PCMS signs are used, the character height and legibility/visibility requirements shall be maintained as listed in Note 15 under "PORTABLE CHANGEABLE MESSAGE SIGNS" above.
2. When symbol signs, such as the "Flagger Symbol"(CW20-7) are represented graphically on the Full Matrix PCMS sign and, with the approval of the Engineer, it shall maintain the legibility/visibility requirement listed above.
3. When symbol signs are represented graphically on the Full Matrix PCMS, they shall only supplement the use of the static sign represented, and shall not substitute for, or replace that sign.
4. A full matrix PCMS may be used to simulate a flashing arrow board provided it meets the visibility, flash rate and dimming requirements on BC(7), for the same size arrow.

DATE:
FILE:

Texas Department of Transportation — Traffic Operations Division Standard

BARRICADE AND CONSTRUCTION PORTABLE CHANGEABLE MESSAGE SIGN (PCMS)

BC(6)-14

FILE: bc-14.dgn	DN: TxDOT	CK: TxDOT	DW: TxDOT	CK: TxDOT
© TxDOT November 2002	CONT	SECT	JOB	HIGHWAY
REVISIONS	0902	90	082	VA
9-07 8-14	DIST		COUNTY	SHEET NO.
7-13	FTW		TARRANT	25

100

1. Barrier Reflectors shall be pre-qualified, and conform to the color and reflectivity requirements of DMS-8600. A list of prequalified Barrier Reflectors can be found at the Material Producer List web address shown on BC(1).
2. Color of Barrier Reflectors shall be as specified in the TMUTCD. The cost of the reflectors shall be considered subsidiary to Item 512.

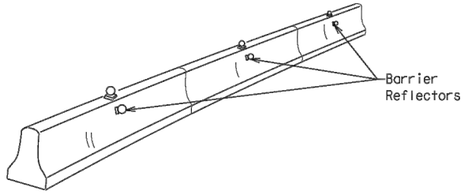

CONCRETE TRAFFIC BARRIER (CTB)

3. Where traffic is on one side of the CTB, two (2) Barrier Reflectors shall be mounted in approximately the midsection of each section of CTB. An alternate mounting location is uniformly spaced at one end of each CTB. This will allow for attachment of a barrier grapple without damaging the reflector. The Barrier Reflector mounted on the side of the CTB shall be located directly below the reflector mounted on top of the barrier, as shown in the detail above.
4. Where CTB separates two-way traffic, three barrier reflectors shall be mounted on each section of CTB. The reflector unit on top shall have two yellow reflective faces (Bi-Directional)while the reflectors on each side of the barrier shall have one yellow reflective face, as shown in the detail above.
5. When CTB separates traffic traveling in the same direction, no barrier reflectors will be required on top of the CTB.
6. Barrier Reflector units shall be yellow or white in color to match the edgeline being supplemented.
7. Maximum spacing of Barrier Reflectors is forty (40) feet.
8. Pavement markers or temporary flexible-reflective roadway marker tabs shall NOT be used as CTB delineation.
9. Attachment of Barrier Reflectors to CTB shall be per manufacturer's recommendations.
10. Missing or damaged Barrier Reflectors shall be replaced as directed by the Engineer.
11. Single slope barriers shall be delineated as shown on the above detail.

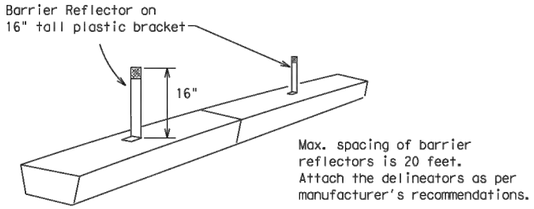

LOW PROFILE CONCRETE BARRIER (LPCB)

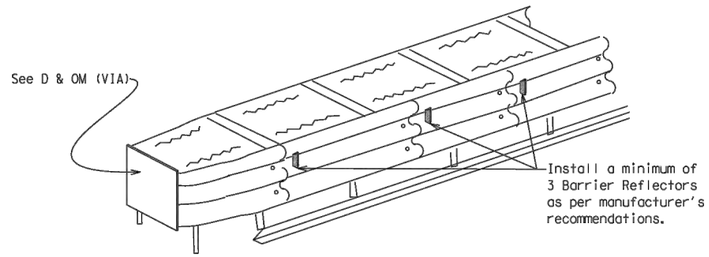

DELINEATION OF END TREATMENTS

END TREATMENTS FOR CTB'S USED IN WORK ZONES

End treatments used on CTB's in work zones shall meet crashworthy standards as defined in the National Cooperative Highway Research Report 350. Refer to the CWZTCD List for approved end treatments and manufacturers.

BARRIER REFLECTORS FOR CONCRETE TRAFFIC BARRIER AND ATTENUATORS

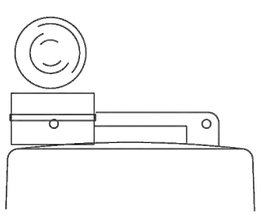

Type C Warning Light or approved substitute mounted on a drum adjacent to the travel way.

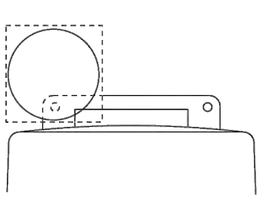

Warning reflector may be round or square.Must have a yellow reflective surface area of at least 30 square inches

WARNING LIGHTS

1. Warning lights shall meet the requirements of the TMUTCD.
2. Warning lights shall NOT be installed on barricades.
3. Type A-Low Intensity Flashing Warning Lights are commonly used with drums. They are intended to warn of or mark a potentially hazardous area. Their use shall be as indicated on this sheet and/or other sheets of the plans by the designation "FL". The Type A Warning Lights shall not be used with signs manufactured with Type B_{FL} or C_{FL} Sheeting meeting the requirements of Departmental Material Specification DMS-8300.
4. Type-C and Type D 360 degree Steady Burn Lights are intended to be used in a series for delineation to supplement other traffic control devices. Their use shall be as indicated on this sheet and/or other sheets of the plans by the designation "SB".
5. The Engineer/Inspector or the plans shall specify the location and type of warning lights to be installed on the traffic control devices.
6. When required by the Engineer, the Contractor shall furnish a copy of the warning lights certification. The warning light manufacturer will certify the warning lights meet the requirements of the latest ITE Purchase Specifications for Flashing and Steady-Burn Warning Lights.
7. When used to delineate curves, Type-C and Type D Steady Burn Lights should only be placed on the outside of the curve, not the inside.
8. The location of warning lights and warning reflectors on drums shall be as shown elsewhere in the plans.

WARNING LIGHTS MOUNTED ON PLASTIC DRUMS

1. Type A flashing warning lights are intended to warn drivers that they are approaching or are in a potentially hazardous area.
2. Type A random flashing warning lights are not intended for delineation and shall not be used in a series.
3. A series of sequential flashing warning lights placed on channelizing devices to form a merging taper may be used for delineation. If used, the successive flashing of the sequential warning lights should occur from the beginning of the taper to the end of the merging taper in order to identify the desired vehicle path. The rate of flashing for each light shall be 65 flashes per minute, plus or minus 10 flashes.
4. Type C and D steady-burn warning lights are intended to be used in a series to delineate the edge of the travel lane on detours, on lane changes, on lane closures, and on other similar conditions.
5. Type A, Type C and Type D warning lights shall be installed at locations as detailed on other sheets in the plans.
6. Warning lights shall not be installed on a drum that has a sign, chevron or vertical panel.
7. The maximum spacing for warning lights on drums should be identical to the channelizing device spacing.

WARNING REFLECTORS MOUNTED ON PLASTIC DRUMS AS A SUBSTITUTE FOR TYPE C (STEADY BURN) WARNING LIGHTS

1. A warning reflector or approved substitute may be mounted on a plastic drum as a substitute for a Type C, steady burn warning light at the discretion of the Contractor unless otherwise noted in the plans.
2. The warning reflector shall be yellow in color and shall be manufactured using a sign substrate approved for use with plastic drums listed on the CWZTCD.
3. The warning reflector shall have a minimum retroreflective surface area (one-side) of 30 square inches.
4. Round reflectors shall be fully reflectorized, including the area where attached to the drum.
5. Square substrates must have a minimum of 30 square inches of reflectorized sheeting. They do not have to be reflectorized where it attaches to the drum.
6. The side of the warning reflector facing approaching traffic shall have sheeting meeting the color and retroreflectivity requirements for DMS 8300-Type B or Type C.
7. When used near two-way traffic, both sides of the warning reflector shall be reflectorized.
8. The warning reflector should be mounted on the side of the handle nearest approaching traffic.
9. The maximum spacing for warning reflectors should be identical to the channelizing device spacing requirements.

Arrow Boards may be located behind channelizing devices in place for a shoulder taper or merging taper, otherwise they shall be delineated with four (4) channelizing devices placed perpendicular to traffic on the upstream side of traffic.

1. The Flashing Arrow Board should be used for all lane closures on multi-lane roadways, or slow moving maintenance or construction activities on the travel lanes.
2. Flashing Arrow Boards should not be used on two-lane, two-way roadways, detours, diversions or work on shoulders unless the "CAUTION" display (see detail below) is used.
3. The Engineer/Inspector shall choose all appropriate signs, barricades and/or other traffic control devices that should be used in conjunction with the Flashing Arrow Board.
4. The Flashing Arrow Board should be able to display the following symbols:

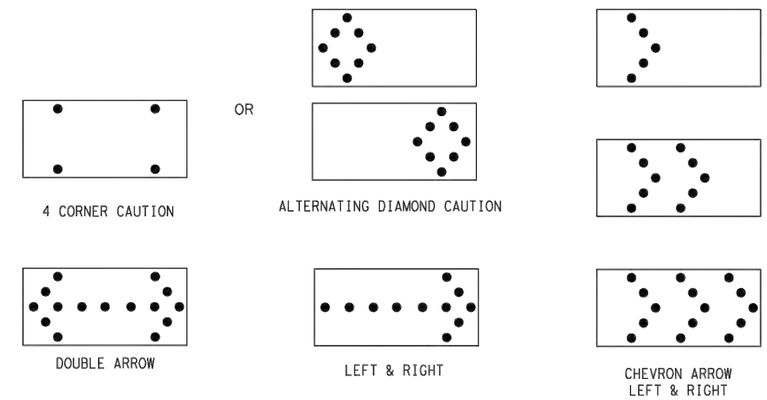

5. The "CAUTION" display consists of four corner lamps flashing simultaneously, or the Alternating Diamond Caution mode as shown.
6. The straight line caution display is NOT ALLOWED.
7. The Flashing Arrow Board shall be capable of minimum 50 percent dimming from rated lamp voltage. The flashing rate of the lamps shall not be less than 25 nor more than 40 flashes per minute.
8. Minimum lamp "on time" shall be approximately 50 percent for the flashing arrow and equal intervals of 25 percent for each sequential phase of the flashing chevron.
9. The sequential arrow display is NOT ALLOWED.
10. The flashing arrow display is the TxDOT standard; however, the sequential Chevron display may be used during daylight operations.
11. The Flashing Arrow Board shall be mounted on a vehicle, trailer or other suitable support.
12. A Flashing Arrow Board SHALL NOT BE USED to laterally shift traffic.
13. A full matrix PCMS may be used to simulate a Flashing Arrow Board provided it meets visibility, flash rate and dimming requirements on this sheet for the same size arrow.
14. Minimum mounting height of trailer mounted Arrow Boards should be 7 feet from roadway to bottom of panel.

REQUIREMENTS

TYPE	MINIMUM SIZE	MINIMUM NUMBER OF PANEL LAMPS	MINIMUM VISIBILITY DISTANCE
B	30 x 60	13	3/4 mile
C	48 x 96	15	1 mile

ATTENTION

Flashing Arrow Boards shall be equipped with automatic dimming devices.

WHEN NOT IN USE, REMOVE THE ARROW BOARD FROM THE RIGHT-OF-WAY OR PLACE THE ARROW BOARD BEHIND CONCRETE TRAFFIC BARRIER OR GUARDRAIL.

FLASHING ARROW BOARDS

TRUCK-MOUNTED ATTENUATORS

1. Truck-mounted attenuators (TMA) used on TxDOT facilities must meet the requirements outlined in the National Cooperative Highway Research Report No. 350 (NCHRP 350) or the Manual for Assessing Safety Hardware (MASH).
2. Refer to the CWZTCD for the requirements of Level 2 or Level 3 TMAs.
3. Refer to the CWZTCD for a list of approved TMAs.
4. TMAs are required on freeways unless otherwise noted in the plans.
5. A TMA should be used anytime that it can be positioned 30 to 100 feet in advance of the area of crew exposure without adversely affecting the work performance.
6. The only reason a TMA should not be required is when a work area is spread down the roadway and the work crew is an extended distance from the TMA.

Texas Department of Transportation — Traffic Operations Division Standard

BARRICADE AND CONSTRUCTION ARROW PANEL, REFLECTORS, WARNING LIGHTS & ATTENUATOR

BC(7)-14

FILE: bc-14.dgn	DN: TxDOT	CK: TxDOT	DW: TxDOT	CK: TxDOT
© TxDOT November 2002	CONT	SECT	JOB	HIGHWAY
REVISIONS	0902	90	082	VA
9-07 8-14	DIST		COUNTY	SHEET NO.
7-13	FTW		TARRANT	26

DATE:
FILE: